SEMI – AUTOMATIC
SELF PROPELLING ROBOT Wrapping Machine
Series FR3xx/FR4xx
FR3.1414

FR3.1414-Manual OP2-32.22X.XXX.03.04.EN 01/ servisia/ ORIGINAL MANUAL © 10/14

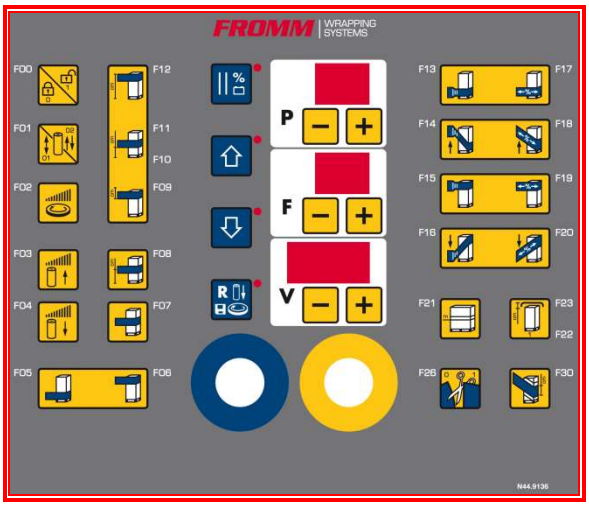

INDEX

Page

BE Opgelet!
Leest U in elk geval de gebruiksaanwijzing, vooraleer de machine wordt opgesteld, geïnstalleerd en in gebruik genomen wordt. Daardoor zorgt U voor Uw eigen veiligheid en vermijdt U schade aan Uw machine.

DE Achtung!
Lesen Sie unbedingt die Gebrauchsanweisung vor Aufstellung-Installation-Inbetriebnahme.
Dadurch schützen Sie sich und vermeiden Schäden an Ihrem Apparat.

DK OBS!
De bør absolut læse bruganvisningen, inden maskinen opstilles, installeres og tages i brug.
Derved beskytter De Dem selv og undgår skader på maskinen.

ES Atención!
Resulta imprescindible leer las Instrucciones de manejo antes de proceder al Emplazamiento/ Instalacion/Puesta en servicio del aparato, con objeto de protegerse a si mismo y evitar el deterioro de la máquina debido a un manejo incorrecto.

FR Attention!
Lisez impérativement le mode d'emploi avant l'installation/la mise en service.
Vous vous protègerez ainsi et éviterez des détériorations sur votre appareil.

GB Important!
Read the operating instructions carefully before installation and before using this machine for the first time.
You will avoid the risk of causing harm to yourself or to your machine in this way.

GR Προσοχή!
Πρίν την εγκατάσταση, σύνδεοη καί αρχική λειτουργια της συσκευής διαβάστε προσεκτικά τίς οδηγιες χρήσης.
‘Ετσι προστατεύετε τον εαυτό σας και αποφεύγετε πιθανές βλάβες συσκευή.

IT Attenzione!
Leggere assolutamente le istruzioni d'uso prima di procedere alla posizionatura – installazione - messa in funzione. In questo modo ci si protegge e si evitano danni all’apparecchio.

NO NB!
De må lese bruksanvisningen før oppstillning, installasjon og start av maskinen!
Gjør det for å unngå skade på Dem selv og maskinen.

NL Let op!
Lees beslist de gebruiksaanwijzing voor het plaatsen, installeren en in gebruik nemen van uw machine.
Dat is veiliger voor Uzelf en U voorkomt onnodige schade aan Uw machine.

PL Ważne!
Przed instalacją maszyny, bądź przed przystąpieniem do pracy z maszyną po raz pierwszy, należy dokładnie przeczytać i zapoznać się z niniejszą instrukcją obsługi.
W ten sposób uniknie się ryzyka mogącego spowodować uraz ciała bądź uszkodzenie maszyny**.**

PT Atenção!
Leia as instruções de utilização antes da montagem - instalação e - primeira utilizaçãoā
Assim evita avarias no aparelho.

SE OBS!
Läs bruksanvisningen noga före uppställning, installation och använding. Ni förebygger därmed olycks-risker och undviker skador på maskinen.

FI Huomio!
Tutustukaa huolellisesti käyttöohjeeseen ennen laitteen asennusta jä käyttöönottoa.
Näin vältytte mahdollisilta vahingoilta käyttäes-sänne konetta.

MACHINE MAKE – UP

THE FR3xx FROMM series is a wheeled robot, which independently rotates around stabilized products to wrap and stabilize them by means of stretch film.

It is controlled by a dedicated electronic control unit including a FROMM-PLC for execution of the various processes.
Particular attention must be paid to charging the robot battery in order to ensure a lifetime as long as possible. (refer to the chapter BASIC OPERATIONS and ASSEMBLY ESQUENCE)

Serial number	
Delivery Date	

Art.-Nr.	Model		
32.221.120	FR330	OP2/B1/H2200mm/C2	
32.221.140	FR350	OP2/B1/H2200mm/C4	
32.221.160	FR390	OP2/B1/H2200mm/C6	
32.221.170	FR400	OP2/B1/H2200mm/C7	
32.222.120	FR330	OP2/B2-24V-110Ah/H2200mm/C2	
32.222.140	FR350	OP2/B2-24V-110Ah/H2200mm/C4	
32.222.160	FR390	OP2/B2-24V-110Ah/H2200mm/C6	
32.222.170	FR400	OP2/B2-24V-110Ah/H2200mm/C7	
32.223.120	FR330	OP2/B3-24V-120Ah/H2200mm/C2	
32.223.140	FR350	OP2/B3-24V-120Ah/H2200mm/C4	
32.223.160	FR390	OP2/B3-24V-120Ah/H2200mm/C6	
32.223.170	FR400	OP2/B3-24V-120Ah/H2200mm/C7	
32.221.220	FR331	OP2/B1/H2500mm/C2	
32.221.240	FR351	OP2/B1/H2500mm/C4	
32.221.260	FR391	OP2/B1/H2500mm/C6	
32.221.270	FR401	OP2/B1/H2500mm/C7	
32.222.220	FR331	OP2/B2-24V-110Ah/H2500mm/C2	
32.222.240	FR351	OP2/B2-24V-110Ah/H2500mm/C4	
32.222.260	FR391	OP2/B2-24V-110Ah/H2500mm/C6	
32.222.270	FR401	OP2/B2-24V-110Ah/H2500mm/C7	
32.223.220	FR331	OP2/B3-24V-120Ah/H2500mm/C2	
32.223.240	FR351	OP2/B3-24V-120Ah/H2500mm/C4	
32.223.260	FR391	OP2/B3-24V-120Ah/H2500mm/C6	
32.223.270	FR401	OP2/B3-24V-120Ah/H2500mm/C7	

MACHINE MAKE – UP

32.221.320	FR332	OP2/B1/H2800mm/C2	
32.221.340	FR352	OP2/B1/H2800mm/C4	
32.221.360	FR392	OP2/B1/H2800mm/C6	
32.221.370	FR402	OP2/B1/H2800mm/C7	
32.222.320	FR332	OP2/B2-24V-110Ah/H2800mm/C2	
32.222.340	FR352	OP2/B2-24V-110Ah/H2800mm/C4	
32.222.360	FR392	OP2/B2-24V-110Ah/H2800mm/C6	
32.222.370	FR402	OP2/B2-24V-110Ah/H2800mm/C7	
32.223.320	FR332	OP2/B3-24V-120Ah/H2800mm/C2	
32.223.340	FR352	OP2/B3-24V-120Ah/H2800mm/C4	
32.223.360	FR392	OP2/B3-24V-120Ah/H2800mm/C6	
32.223.370	FR402	OP2/B3-24V-120Ah/H2800mm/C7	

32.221.161	FR390	OP2/B1/H2200mm/C6 With cutting device	
32.221.171	FR400	OP2/B1/H2200mm/C7 With cutting device	
32.222.161	FR390	OP2/B2-24V-110Ah/H2200mm/C6 With cutting device	
32.222.171	FR400	OP2/B2-24V-110Ah/H2200mm/C7 With cutting device	
32.223.161	FR390	OP2/B3-24V-120Ah/H2200mm/C6 With cutting device	
32.223.171	FR400	OP2/B3-24V-120Ah/H2200mm/C7 With cutting device	

32.221.261	FR391	OP2/B1/H2500mm/C6 With cutting device	
32.221.271	FR401	OP2/B1/H2500mm/C7 With cutting device	
32.222.261	FR391	OP2/B2-24V-110Ah/H2500mm/C6 With cutting device	
32.222.271	FR401	OP2/B2-24V-110Ah/H2500mm/C7 With cutting device	
32.223.261	FR391	OP2/B3-24V-120Ah/H2500mm/C6 With cutting device	
32.223.271	FR401	OP2/B3-24V-120Ah/H2500mm/C7 With cutting device	

32.221.361	FR392	OP2/B1/H2800mm/C6 With cutting device	
32.221.371	FR402	OP2/B1/H2800mm/C7 With cutting device	
32.222.361	FR392	OP2/B2-24V-110Ah/H2800mm/C6 With cutting device	
32.222.371	FR402	OP2/B2-24V-110Ah/H2800mm/C7 With cutting device	
32.223.361	FR392	OP2/B3-24V-120Ah/H2800mm/C6 With cutting device	
32.223.371	FR402	OP2/B3-24V-120Ah/H2800mm/C7 With cutting device	

GENERAL

The FR3xx/FR4xx robot is an semi-automatic pallet wrapping machine.
The operator has to place the robot near the pallet, (the wheel, mounted in the reading arm, have to follows the outline of the product) and connect the film on the pallet.
The tension or stretch can be adjusted on the operating panel or carriage.
Depending on the functionality of the machine, the operator can start the wrapping process or initially he has to setup the wrapping cycle, speed of turntable and carriage.

The process will be activated by pressing the start button. After completing the cycle, the robot will stop, the film can be disconnected and the operator can take away the pallet.

- This manual is only intended for a semi-automatic pallet stretch wrapping machine, mentioned at page one, as delivered by FROMM Stretch Wrapping Division.
- FOR EVERYTHING IN THIS MANUAL IS VALID, IF APPLIED!
- THE ORIGINAL, SIGNED FACTORY MANUAL HAS TO REMAIN INSIDE THE ELECTRICAL BOX OF THE MACHINE, TOGETHER WITH THE MACHINE ELECTRICAL PLAN AND INVERTER MANUALS.
- Pre- stretching (Stretching out) the film prior to application on the goods reduces the costs of packaging and is easier on the environment. (Available pre stretch depend on the model)
- Refer to chapter for the technical data, which describes the installation in detail and for the complete size of the installation.
- Read carefully at least the chapters **HANDELING AND TRANSPORT** and **INSTALLATION.**
- For safety reasons the entire instruction manual should be read before setting in operation the machine/installation, solving failures and executing maintenance.
- We particularly draw your attention to the chapters **SAFETY INSTRUCTIONS** and **WARNINGS** which point out the intended use and unsafe situations that could not be prevented in the design and manufacture of the wrapping machine.
- It is strictly prohibited to tamper with the machine It is prohibited to feed the machine with unforeseen, corrosive or inflammable products since the machine is not the explosion-proof type.
- The duration of guarantee is provided the following are observed: the use for which the machine was designed, built and protected, in addition to recommendations, information - including matters of general knowledge - details plus the safety and health technical limits notified to by the Manufacturer to the User by virtue of the operating use.
- We cannot accept any claim for warranty if non-original spare parts are utilized.
- If the machine is used beyond its operating limits and if the manufacturer's features are altered in any way, such use is considered **improper.** In this case **MANUFACTURER** is relieved of any liability for injury/damage caused to people/property due to failure to comply with these guidelines.
- For all the aforementioned reasons, we recommend that our customers always notify the Service Department.

SERVICE DEPARTMENT Please contact, in case of problems:

SAFETY INSTRUCTIONS

ATTENTION!

The following conditions have always to be satisfied, unless otherwise indicated in other instructions in this manual.

- This wrapping machine has been delivered by FROMM Stretch Wrapping Division and may only be applied for wrapping of pallets / products which meet the requirements as mentioned in the description of the machine in chapter TECHNICAL DATA.
  Any other use of the machine as for the described purpose may cause danger due to damage to the machine and/or the safety of the operator or other persons in the neighbourhood of the machine.

- Read this manual carefully before using the machine, and be aware of the residuals risks which could not be excluded during the development of this machine.

- In any case all the components must be disposed of by scrupulously complying with the corresponding laws in force in the country in which the machine is used, and only by qualified persons who are capable of assessing possible risks.

- Only personnel trained for the purpose may operate the machine

- Use the emergency stop to halt the machine immediately

- Only trained electricians may perform electrical work on the machine

- Don't find yourself close to the carriage when the machine is in operation. Be careful especially in the lowering phase of the carriage. (Use the emergency stop to halt the machine immediately).

- Don't find yourself near the robot when is in operation.
  (Use the emergency stop to halt the machine immediately).

- Don't touch the pallet when the machine is in operation.
  (Use the emergency stop to halt the machine immediately).

- Don't place or insert your hand and fingers between mast and carriage.
  (Use the emergency stop to halt the machine immediately).

- Don't put your hand or fingers in the mast.
  (Use the emergency stop to halt the machine immediately).

- Don't put your hand or fingers near the wheels for the carriage movement.
  (Use the emergency stop to halt the machine immediately).

- Don't put your hand or fingers in the electrical box.
  (Use the emergency stop to halt the machine immediately).

- Don't put your finger in the space between the robot and the floor.
  (Use the emergency stop to halt the machine immediately).

- When installing the machine, as a precaution, always check that the controls and safety systems are correctly mounted and operating efficiently. If any malfunctions are noted, immediately stop the production cycle and ask the authorized technical service to intervene

- Examine the data-plates. If they are in poor condition, replace them with utmost urgency, strictly and directly contacting the authorized technical service or the Manufacturer
- The requirements, as mentioned in chapter **MAINTENANCE INSTRUCTIONS** should be satisfied during adjustment and maintenance activities
- People should not step on to means of transport, unless indicated clearly otherwise
- People should not find themselves above the means of transport
- Do not place tools and components on the machine
- Safety devices should not be bridged and put out of operation
- The manufacturer will only make the machine ready for operation, when the electrical main connection satisfies the standards applicable in the country of delivery
- The supplier will do the training of the operating personnel. If not, the training will have to be done properly by the company that takes care of the installation.
- The machines are designed and implemented conforming to the safety laws in force. Consequently, no intrinsic fire risks are envisaged when the machine is used normally
- As such, the equipment provided against the possibility of **fire outbreaks** inside the company are sufficient for any problems caused by the material used for the process
- In the event a fire breaks out and fire extinguishers are used, it is recommended that extinguishers filled only with CO2 be used, so as not to damage both the equipment on the machine and the wiring system
- In the event of **flooding**, it is compulsory that all the power supplies be disconnected before entering the room in which the machine is installed
- In the event the wrapping machine was subjected to a flooding, contact the Customer technical service of MANUFACTURER
- You are strictly recommended not to work in the machine while wearing unsuitable clothing (unbuttoned, ample garments) or personal objects (bracelets, watches, rings, etc.)

ADDITONAL SAFETY INSTRUCTIONS ROBOT FR3xx

ATTENTION!

The following conditions have always to be satisfied, unless otherwise indicated in other instructions in this manual.

- The room in which the machine is housed must not have any shadow areas, annoying bright lights or hazardous stroboscopic effects caused by the lighting supplied by the manufacturer.
- The machine can operate in clear air conditions at ambient temperatures of + 5°C to + 40°C. The machine must be used EXCLUSIVELY BY QUALIFIED PERSONNEL.
- Before starting work, the operator must be perfectly familiar with the position and functioning of all the controls and machine features. Daily check all the safety devices on the machine.
- Before starting the working cycle, the operator must ensure that there are no EXPOSED PERSONS in the HAZARDOUS ZONES.
- The areas where the operator stands must always be kept clear and free of oily residues. Any operations that need to be carried out with some of the safety devices disabled must be performed by one person only, and unauthorised persons may not access the machine during this time.
- IN OBSERVANCE OF Machine Directive 2006/42/EC AND SUBSEQUENT AMENDMENTS AND EN23741, FROMM STRETCH DECLARES THAT THE NOISE EMITTED BY THE MACHINE IN QUESTION FALLS WITHIN THE LIMITS ESTABLISHED BY THE ABOVE MENTIONED REGULATIONS.
- **HAZARDOUS ZONES**

  HAZARDOUS ZONE means any zone within and/or in the vicinity of a machine in which the presence of an exposed person constitutes a risk to the safety and health of that person.
- The MACHINE has a number of HAZARDOUS ZONES in which the residual risks have been reduced, but not completely eliminated:

  Risk of getting trapped.

  Never stand in contact with the product to be wrapped, since there is a risk of falling or getting trapped in the film winding zone.
- **OPERATOR STANDING ZONE**

  STANDING ZONE means the zone where the OPERATOR MUST STAND during NORMAL MACHINE OPERATION.
  Once the robot has been programmed and activated, no further action is required by the operator. Therefore, do not stand in the working area around the product to be wrapped and stabilised.
- **MACHINE STATE**:

  STATE means the operating mode (AUTOMATIC, JOG, MANUAL, TIMED STOP, EMERGENCY STOP ...) and the condition of the safety devices on the machine (emergency stop pressed, type of "energy source isolation". Regarding isolation of the energy sources, it will be pointed out when the emergency switch needs to be locked and the power connector disconnected.

SAFETY DEVICES

We urge on you again that all safety devices are installed for the safety of the operator etc. and should not be bridged and put out of operation.

Refer to the drawing below for the applied references.

Survey control panel

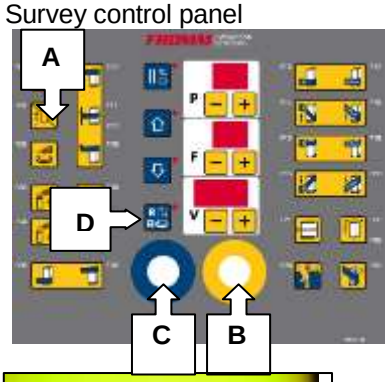

A = Acoustic signal

B = Emergency stop .

C= Light On, when the power is On

D= Main switch

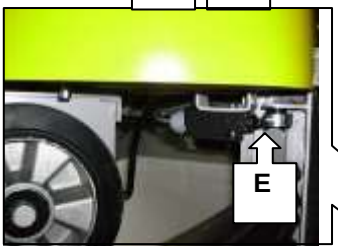

E = Crush-proof guard

E =
This is a mobile crush-proof guard, interlocked by means of a micro switch.
Any time underlying foreign matter comes into contact with the guard, it inverts the film carriage's motion and causes the machine to stop in phase.

F = Carriage guard

F = **COVER**
Do not remove the fixed guards when the machine is running and always refit them after any maintenance operation

	WARNING: ON PARTICULARLY SMOOTH OR SLIPPERY FLOORS, THE ROBOT MAY STOP WITH A SLIGHT DELAY
	WARNING: DO NOT REMOVE THE SAFETY BUMPER AND ALWAYS REFIT IT AFTER ANY MAINTENANCE OPERATION
	DO NOT REMOVE THE FIXED GUARDS WHEN THE MACHINE IS RUNNING AND ALWAYS REFIT THEM AFTER ANY MAINTENANCE OPERATION

WARNINGS

- The mean weighed noise level of the machine is less than 80 dBa. It is possible that, depending on the applied film, during wrapping of the pallets / products incidentally a noise level with a maximum of 80 dBa will be measured. Carrying of noise protecting devices is advised.

- One has to reckon with the possibility that the film (roll) contains an electrostatic charge.

- Utmost caution has to be taken with respect to the complete electrical installation. ONLY trained persons may carry out activities to it, after having taken the required safety measures as mentioned in the chapter **SAFETY INSTRUCTIONS**.

- One has to reckon with the European safety requirements and standards if the machine has to be adapted and thus safety measures or protection covers also have to be adapted.

- Touching the electrical equipment will hazard your personal safety.

- Persons who carry out changes in or adaptations (function, operation or principles) to the machine are fully responsible for those changes and/or adaptations.

- All relevant safety measures should be taken when carrying out any activity on the machine, especially during maintenance activities and solving failures.
  Take care that the main switch is switched off (position "0") and locked (If possible), or that the power cable is disconnected in order to prevent other persons in putting in action the machine during your activities.
  All the normally valid safety measures or customs with respect to safety should also be taken during those activities.

- Playing with or around the machine may cause dangerous situations with a machine in operation. This playing is never allowed!

- All other prescriptions and laws with respect to working conditions and safety on the working spot should be observed with this machine.

- An acoustic signal device has been installed in the control cabinet, which will be activated first during a short period, as a warning every time before the machine is starting.

EXPLANATION IDENTIFICATION STICKER

An identification sticker with the following information has been mounted at the backside of the base-unit.

Name of the manufacturer	:	FROMM Wrapping Systems s.r.l**.**
Type	:	Machine type.
Serialnr.	:	Production number of manufacturer.
Voltage	:	Supply voltage.
Power	:	Used power
Fuse	:	5 Amp
Year of manufacture	:	Year in which the machine has been built by manufacturer.

Besides, the CE-mark has been placed on the identification plate:

CE-mark

Machine fulfils the applied requirements as mentioned in the CE - machine directives

2006/42/EC (Directive)
2004/108/EC (Electromagnetic compatibility)
2006/95/EC (Low tension)

- It is strictly prohibited to remove the identification sticker or to replace it with any other similar one of any type.
- Should the CE mark sticker be damaged for any reason, please notify the MANUFACTURER immediately.

TECHNICAL DATA

Machine	- Maximum speed machine	95 M/Min
	- Maximum speed carriage	3,4 M/Min
	- Capacity	max. 20 pallets/hr.
	- Operational hours	8 hrs/day, 5 days/week
	- Sealing height FR3xx	minimum of 2000mm / 78.74”
	- Sealing height FR3xx	minimum of 2500mm / 98.42”
	- Sealing height FR3xx	minimum of 2800mm / 110.23”
Weight	- Total weight FR3xx	approx. 330kg
	- Total weight FR3xx	approx. 335kg
	- Total weight FR3xx	approx. 345kg
Conditions	- Environmental temperature	+ 5 to +40°C
	- Environment	clean, dry and non-aggressive
Electrical	- Power supply	1 x 230 V 50/60Hz
	- Control voltage	24 VAC
	- Battery Voltage	24 Volt (2 x 12Volt)
	- Battery	90-100 Ah
	- Charging time	8 – 10 hours
	- Installed power	1 kW / 5 Amp
	- Protection class	IP 54
Pallet goods	- Max. Pallet dimensions (Length x width)	No Maximum
	- Min. Pallet dimensions (Length x width)	600 x 600 x 140mm 23.62” x 23.62” x 5,51”
	- Height with load FR3xx (pallet included)	min. 19,69” / max. 86,61”
	- Height with load FR3xx (pallet included)	min. 19,69” / max. 106,29”
	- Height with load FR3xx (pallet included)	min. 19,69” / max. 118.11”
	- Dimensions of load outside pallet	max. 20mm / 0,79” per side
	- Top of load	flat
Stretch-film	- LLDPE Material	Max 27µ / 0.0011”
	- Spool core diameter	76 mm / 3”
	- Outer diameter of spool	Max. 250mm / 9,84”
	- Film width	Max. 500mm / 19,69”
Colors	- Mast	: Blue, RAL 5010
	- Chassis	: Grey, RAL 9006
	- Machine Cover	: Yellow, RAL 1021
	- Film carriage	: Yellow, RAL 1021

Should the need arise to work with products having a different nature than the above mentioned ones. It is essential that you contact the technical service of MANUFACTURER in order to receive written authorization.

	**WARNING : do not use film thicker than <u>27 microns</u> without consulting the Manufacturer**

DIMENSIONS FR3xx/FR4xx

Refer to the LAYOUT on this page for the dimensions.

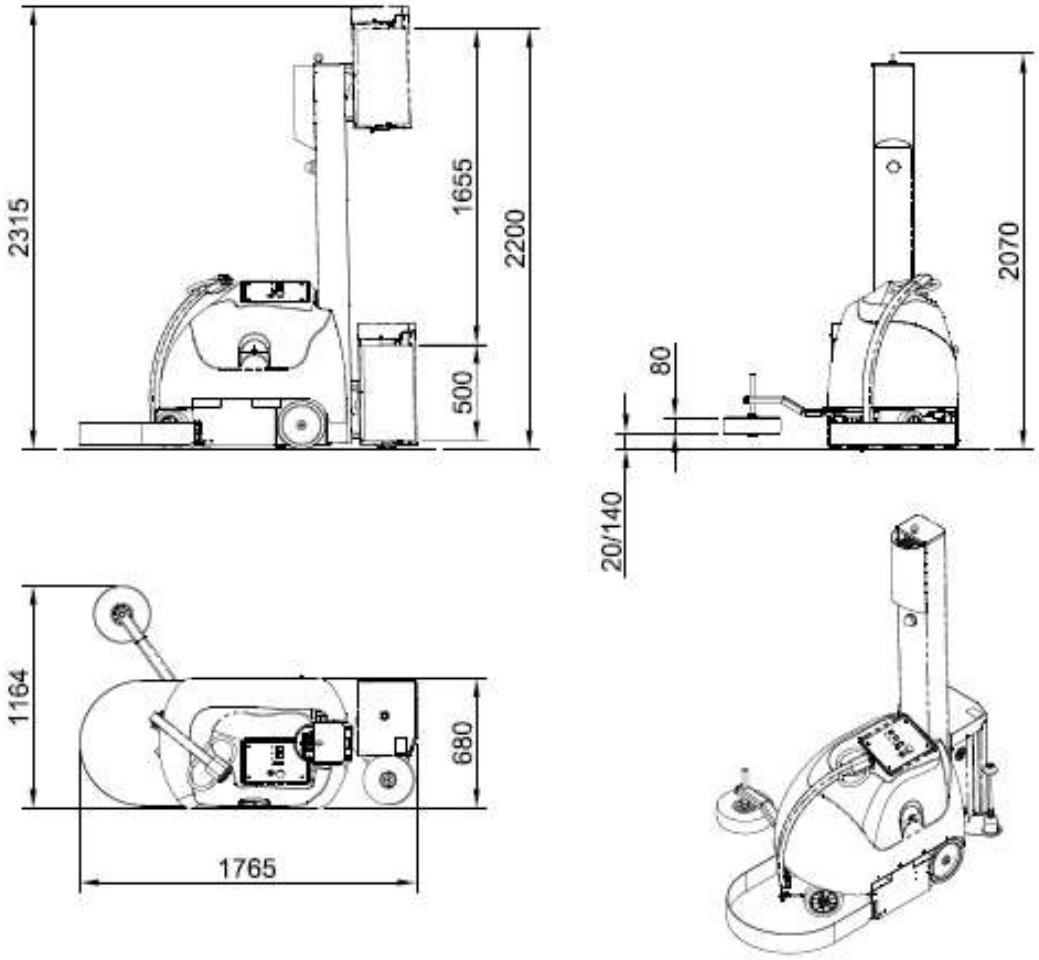

DIMENSIONS DURING WRAPPING

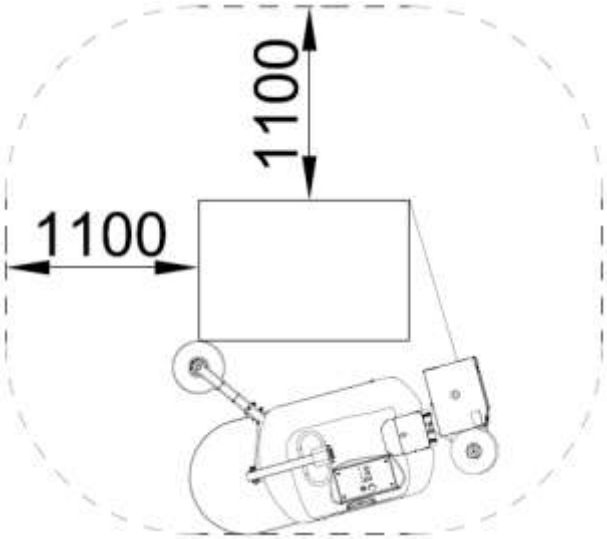

EXPLANATION OF PICTOGRAMS

ATTENTION!! (FOR EVERYTHING IS VALID, IF APPLIED!)

WARNINGS

 Fig 1		Figure 1: DANGER High voltage present.
 Fig 2		Figure 2: Danger Sign
 Fig 3		Figure 3: Risk of crushing one's hands
 Fig 4		Figure 4: Risk of crushing hands and feet
 Fig 5		Figure 5: Falling hazard
 Fig 6		Figure 6: Sharp objects

COMMAND PLATES

 Fig 7		Figure 7: It is prohibited to pass by within the lifting equipment's ray of action

EXPLANATION OF PICTOGRAMS

 Fig 8		Figure 8: Do not use bare flames and do not smoke
 Fig 9		Figure 9: Don't access the area while the machine is working
 Fig 10		Figure 10: Don't remove the SAFETY DEVICES
 Fig 11		Figure 11: Don't execute any work before taking off the voltage of the machine
 Fig 12		Figure 12: Truck insertions
 Fig 13		Figure 13: Lifting points
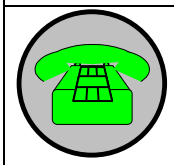 Fig 14		Figure 14: This identifies situations in which **THE SUPPLIER** must be contacted

EXPLANATION OF PICTOGRAMS

 Fig 15		Figure 15: Very important guidelines that must strictly be complied with. Otherwise machine operators could be at risk, the consequence of which would be the voiding of any form of warranty and liability on behalf of **FROMM PACKAGING SYSTEMS.**
 Fig 16		Figure 16: Operations that must never be performed.

CE-MARK

 Fig 17		Figure 17: Machine fulfils the applied requirements as mentioned in the CE-machine directives.

MAIN COMPONENTS

The installation as delivered consists of the following parts:

1- Mast
2- Flash Light
3- Control cabinet with control panel
4- Film carriage
5- Robot cover incl. battery compartment and electronic switch board.

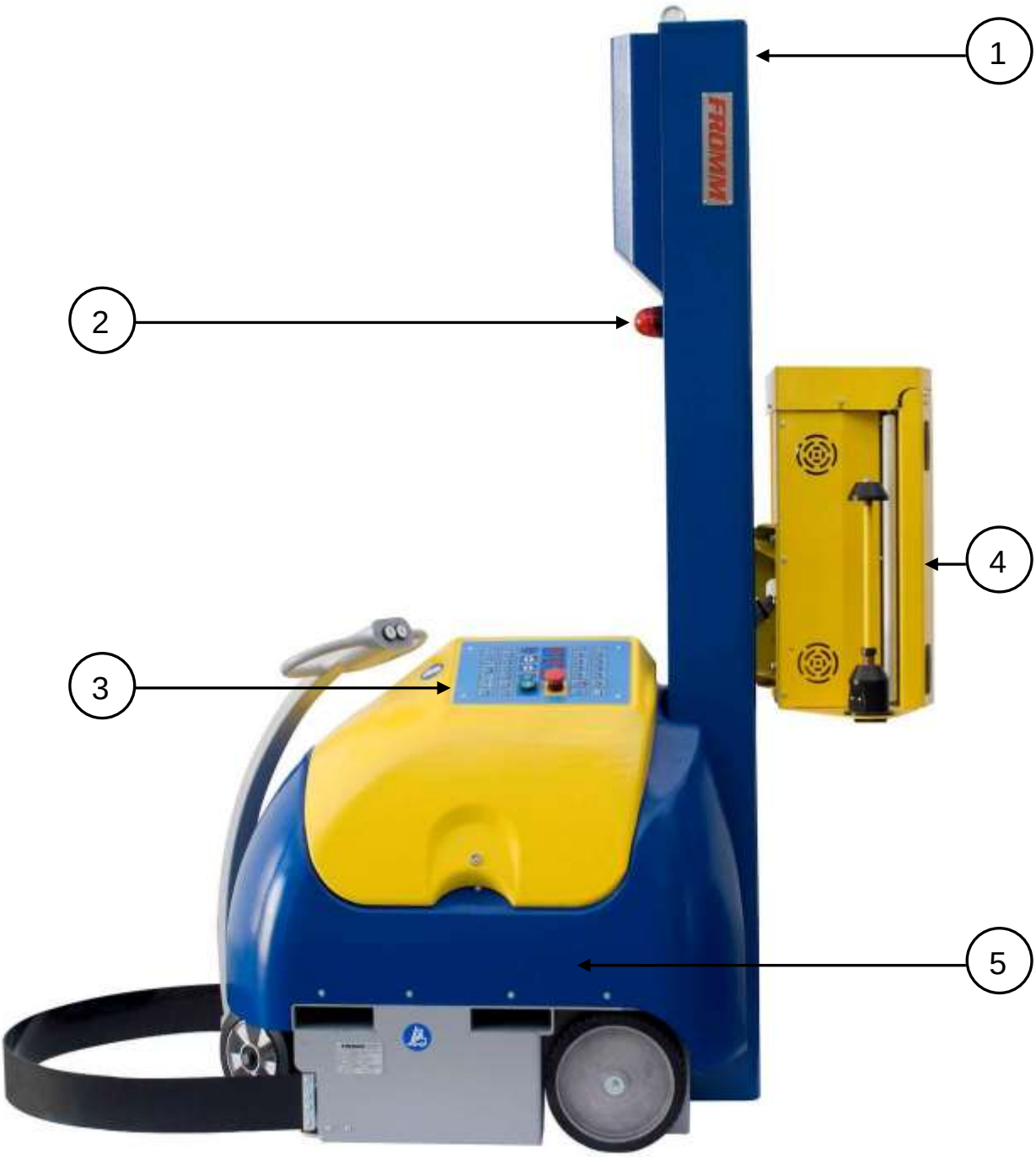

HANDLING & TRANSPORT

ATTENTION!

All mentioned activities may only be executed under supervision of qualified personnel from the manufacturer or his representatives!

Pay attention that proper hoisting and lifting tools are used for handling of the machine.

The machine is supplied in a wooden crate insulated by plastic air bubble film.
It is advisable that two another operators be in attendance on the ground when the machine is moved by means of the mechanical equipment driven by the operator in charge since the size of the machine may prevent a clear view during the various phases of the handling operations.

Depending on weight, dimensions, location of machine on the vehicle, available installation space lifting methods and points suitable for the operations described below must be used, fully observing the current safety and health laws and the Manufacturer's recommendations**.**

Lifting and handling of packing in a wooden crate by crane

- use a crane and sling of sufficient strength

- bring the vehicle near to the lifting pallet

- pass the sling (and/or ropes - chains) around the case in the positions indicated by the external markings (**1**);
First check that the case - sling/hook (**2**) are well secured, then carefully lift the case and place it in the designated area, moving it gently.

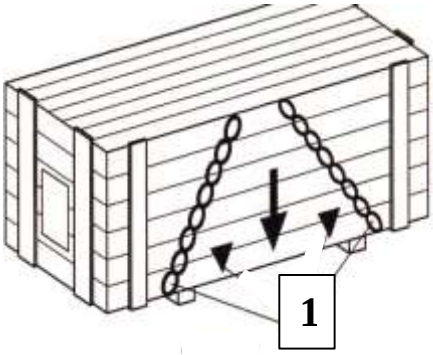

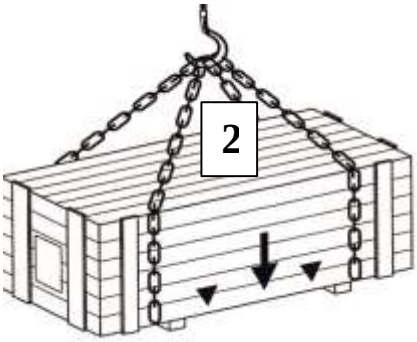

HANDLING & TRANSPORT

Lifting and handling of packing in a wooden crate by fork-lift truck

Lifting and transport must be affected by a fork-lift truck suitable to bear the weight of the machine, its accessories and packing.
Always check in advance that sufficient space is available for the operations.

- slide the forks (**1**) of the truck under the casels support base, in line with the indicator-marks printed (**2**).
- lift the load after ensuring it is stable, and transport it to the area in which packing is to be removed, avoiding jerks and dangerous cambers.

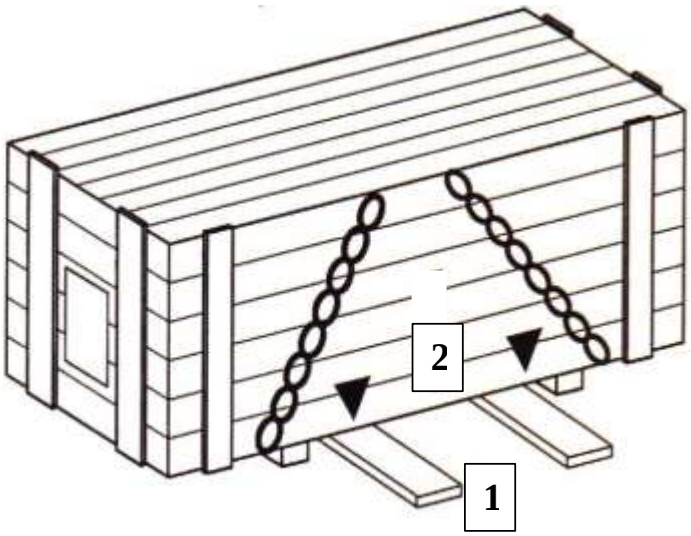

Following measures have to be taken for transport and storage of the machine:
- One has to take care for a suitable storage environment respectively packaging during long-term storage.

Drag bands etc., if used, in order to attach several parts may never be tightened over vulnerable parts, such as control panel, ventilation grills, etc.).

Handling the unpacked machine

Should any machine components be shipped together with the machine, handle them adopting all safety precautions

insert the forks of the suitable lifting equipment within the specific guides (**1**)

1

Machine storage

The machine and any components packed together with it are protected by a plastic covering that does not guarantee long storage times.

The machine must never be stacked nor is it capable of supporting external loads.

INSTALLATION INSTRUCTION

ATTENTION!
All mentioned activities may only be executed under supervision of qualified personnel from the manufacturer or his representatives!
FOR EVERYTHING IS VALID: IF APPLIED!

Refer to layout in **SAFETY DEVICES** for mentioned position numbers.

General guideline

Always check in advance that the minimum conditions for machine placing and operation are observed, in particular: ambient conditions (suitable floor), temperature, humidity, lighting and suitability of the designated area.
Installation in rooms subject to the risks of flooding, explosion and fire is strictly forbidden.

The area necessary for installation of the wrapping machine is the area according to the dimensions on the layout plus enough space for installing and working on the machine.
Installation must be executed by qualified personnel, directly coordinated by the authorized Technical Service, fully observing the instructions that follow, in addition to current safety and health laws.

As a precaution, always check for any damage caused during transport and handling work.
If necessary, contact the Manufacturer directly.

Temperature

For safety make sure the machine is operating at ambient temperature in the range +10°C to +30°C.
If other values are measured, contact the Authorized Technical Service with utmost urgency.

Work areas

It is strictly forbidden to locate and/or use the machine if the ambient conditions are liable to cause risks of explosion or inflammability.
Ensure that the following are not present: dust concentration, gas, dangerous fumes and particles, electrostatic fields, excessive electro-magnetic flow, or anything else that might be harmful to persons so exposed or to the efficient running of the machine.

In any event, observe the current safety and health laws.

The machine should be placed on a flat, rigid, vibration-free concrete floor

Never access the high parts of the machine improperly.

Energy sources

The client must provide a cable suited for the required supply voltage up to the control cabinet, of which the diameter of the conductors can manage the total of the required power as mentioned in chapter **TECHNICAL DATA**

The wrapping machine should preferably be connected to the customer's supply voltage wall socket with a connecting cable with a standard CEE-plug, being fused with a 16A-fuse (slow).
For the correct plug check chapter **TECHNICAL DATA**

A main switch preceding the plug has to be provided by the customer, if necessary.

The mains supply must satisfy the applicable standards, such as permitted voltage fluctuations, ripple-generation, reduction of high harmonics, etc.

INSTALLATION INSTRUCTION

ATTENTION!

All mentioned activities may only be executed under supervision of qualified personnel from the manufacturer or his representatives!

During maintenance, repair or adjustment operations, the emergency buttons on the control panel must always be activated and the battery disconnected.

FOR EVERYTHING IS VALID: IF APPLIED!

- **Safety bumper unit:**
  Undo the screws (1), fit the bumper unit (2) as shown in the drawing and then screw the screws (1) back in through the holes (3).

- **Feeler wheel unit:**
  Undo the screws (4), fit the wheel unit (5) as shown in the drawing and then screw the screws (4) back in.

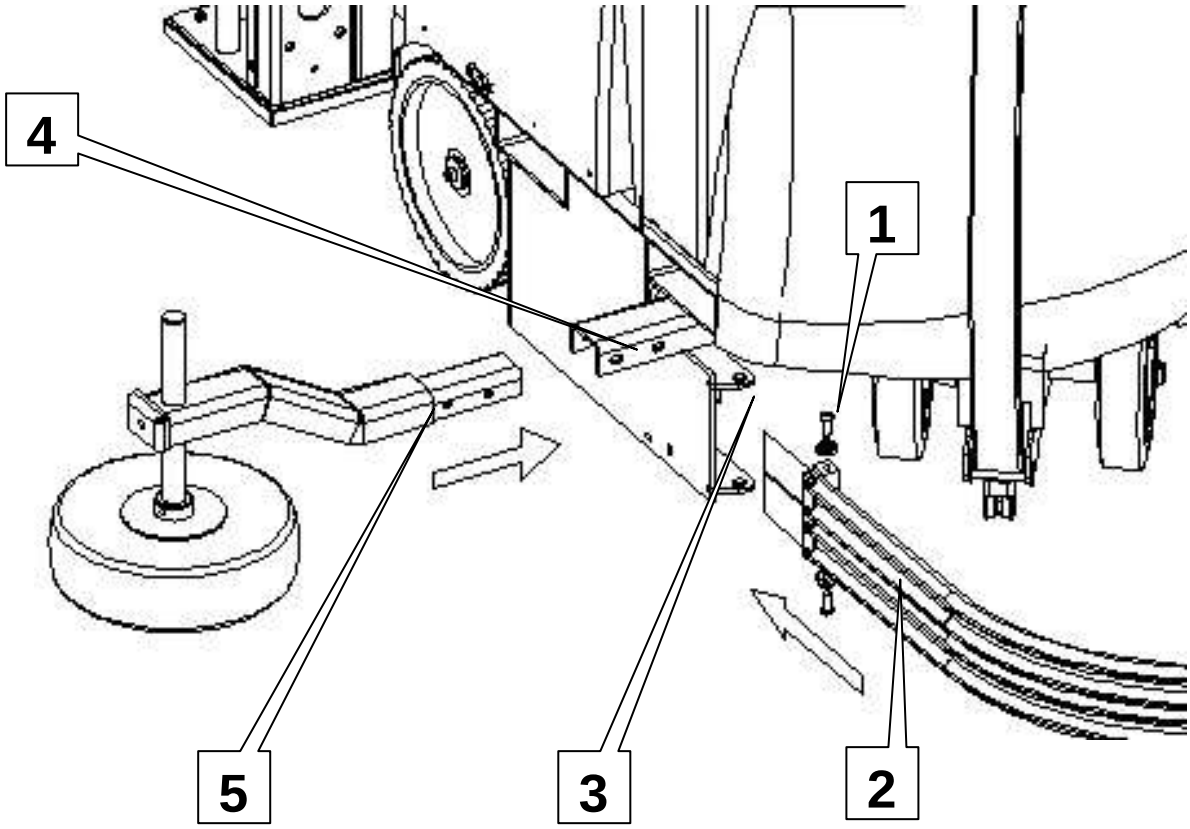

ASSEMBLY SEQUENCE

1. Check the functionality of the EMERGENCY SWITCH (Fig 1)	
 Fig 1	The machine is equipped with a safety device consisting of a series of electromechanical contacts that deactivate the motor when the emergency button is pressed. The machine safety devices are activated with the emergency button that converges in this device, which by means of a REDUNDANT and AUTOMATIC CONTROL function on the intermediate relays on which the emergency switches rest, activates a safety circuit that stops the main motor. This assures that the machine stops immediately from all points of operating condition.

C2 Carriage: delivers film during wrapping adjusting the film application tension. The tension is adjusted by a roller fitted with a mechanical brake which can be manually adjusted with a knob on the carriage.

2. Carriage C2

With this carriage, the tension with which the film is applied to the pallet can be adjusted.
The carriage **C2** is composed of a rubber-coated roller **(1)** and a roller **(2)** with mechanical brake.
Operating the knob **(3)** the braking action is adjusted and, consequently, the film tension.
Upon starting, the film must be loaded on to the carriage. Insert the roll **(5)** on to the centering pin **(4)**.
Run the film between the rollers **(1) & (2)**, following the path shown in Figure **A**. Diagram **A** is also shown on the carriage. The symbol with the triangles identifies the side of the film on which the adhesive (if present) is applied.

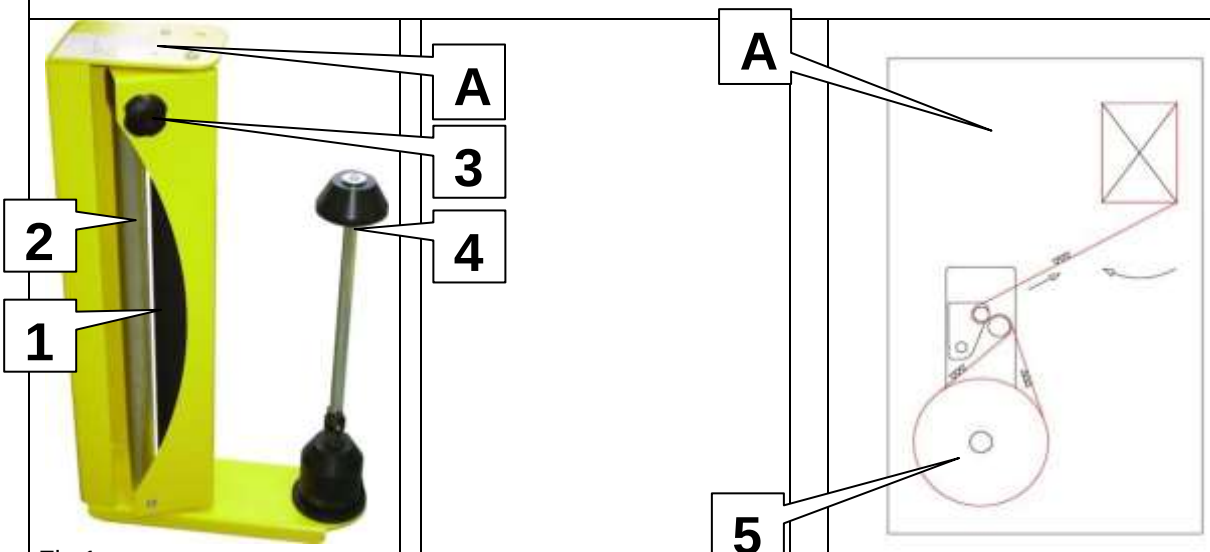

Fig 1

ASSEMBLY SEQUENCE

C4 Carriage: delivers film during wrapping adjusting the film application tension. The tension is adjusted by a roller fitted with an electromagnetic brake.
The tension can be adjusted via the machine operating panel.

3. Carriage C4

The film carriage 2, is composed from a rubber-coated roller **(1)** in combination with electromagnetic brake and idle rollers **(2).**

Adjusting the OP, the braking action is adjusted and, consequently, the film tension.

Upon starting, the film must be loaded onto the carriage. Slide the roll **(3)** onto the core holder of the carriage. Feed the film between the rollers **(1) & (2)**, following the path shown in Figure **A.** Diagram **A** is also shown on the carriage.
The symbol with the triangles identifies the side of the film on which the adhesive (if present) is applied.

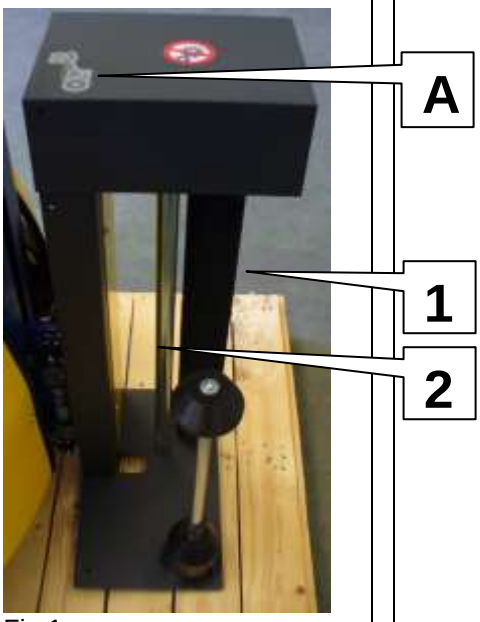

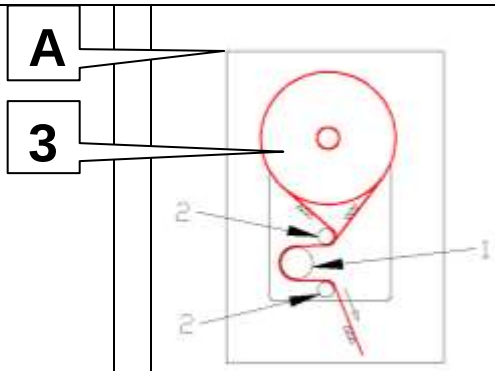

Fig 1

ASSEMBLY SEQUENCE

C6 Carriage: Carriage with one motor pre-stretch system.
The film can be pre-stretched by means of a mechanical control generated by a pair of gears (fixed mechanical ratio). The application tension is manually adjusted and controlled by a sensor which measures its value.

The tension can be adjusted via the machine operating panel.

4. Carriage C6
With this carriage version, the tension with which the film is applied to the pallet can be adjusted via the Operating panel
.
This carriage allows pre-stretching the film according to fixed ratios determined by interchangeable gears.

The pre-stretch ratios usable are:
-150% (1 metre of film is pre-stretched to a length of 2.5 metres).
-200% (1 metre of film is pre-stretched to a length of 3.0 metres).
-250% (1 metre of film is pre-stretched to a length of 3.5 metres).

The carriage is fitted with a sensor **(4)** connected to the out-feed roller, which measures the tension of the film applied to the pallet, and the Operating Panel (OP) to adjust this value.
A specific circuit board integrates the signal of the sensor **(4)** and the adjustment set with the OP in order to dynamically control the speed of the pre-stretch roller drive motor and thus the film tension.
The carriage is fitted with a gear-motor which drives three rubber-coated rollers **(1)**, **(2)** and **(3)** by means of toothed gearing. The different transmission ratios generate different speeds of the rollers **(1)** , **(2)** and **(3)** creating the pre-stretch action.
The carriage also features a set of 3 idle rollers which are used to increase the winding angle of the film on the rubber-coated rollers.

Upon starting, the film must be loaded onto the carriage.
Slide the roll **(5)** onto the centring pin **(6).** Open the door and run the film between the rollers following the path shown in Figure **A**. Diagram **A** is also shown on the carriage. Close the door making sure that it is properly locked.
The symbol with the triangles identifies the side of the film on which the adhesive (if present) is applied.

Fig 1

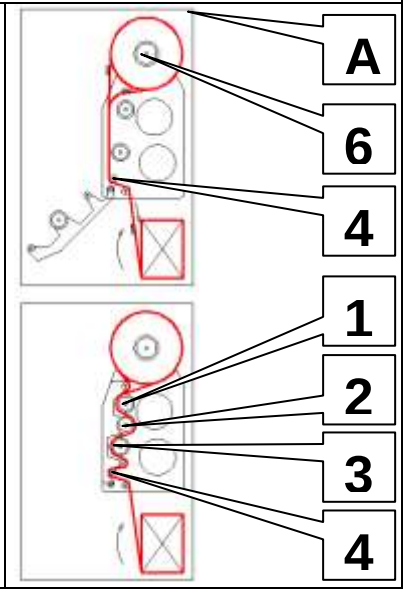

ASSEMBLY SEQUENCE

C7 Carriage: Film carriage with a two motor pre stretch system.

Pre-Stretch can be changed by adjusting the settings on the operating panel

The application tension is manually adjusted and controlled by a sensor which measures its value.

5. Carriage C7

With this carriage version, the pre-stretch and film tension can be adjusted via the operating panel

The pre-stretch can be variable adjusted from 150% up to 400% pre-stretch.

The carriage is fitted with a sensor **(4)** connected to the out-feed roller, which measures the tension of the film applied to the pallet, and the Operating Panel (OP) to adjust this value.
A specific circuit board integrates the signal of the sensor **(4)** and the adjustment set with the OP in order to dynamically control the speed of the pre-stretch roller drive motor and thus the film tension.

Upon starting, the film must be loaded onto the carriage.
Slide the roll **(5)** onto the centring pin **(6).** Open the door and run the film between the rollers following the path shown in Figure **A**. Diagram **A** is also shown on the carriage. Close the door making sure that it is properly locked.
The symbol with the triangles identifies the side of the film on which the adhesive (if present) is applied.

Fig 1

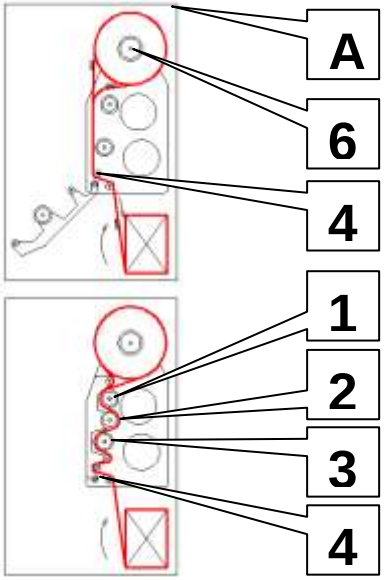

ASSEMBLY SEQUENCE

6. Adjustment reading arm

The reading arm, on which the wheel that follows the outline of the product to be wrapped is mounted, is subject to two adjustments:

a) Wheel height
Undo the screw (**1**), raise or lower the wheel pin (**2**) as shown in the drawing, position the wheel so that it runs around the pallet without depressions and/or protrusions, then tighten the screw (**1**).

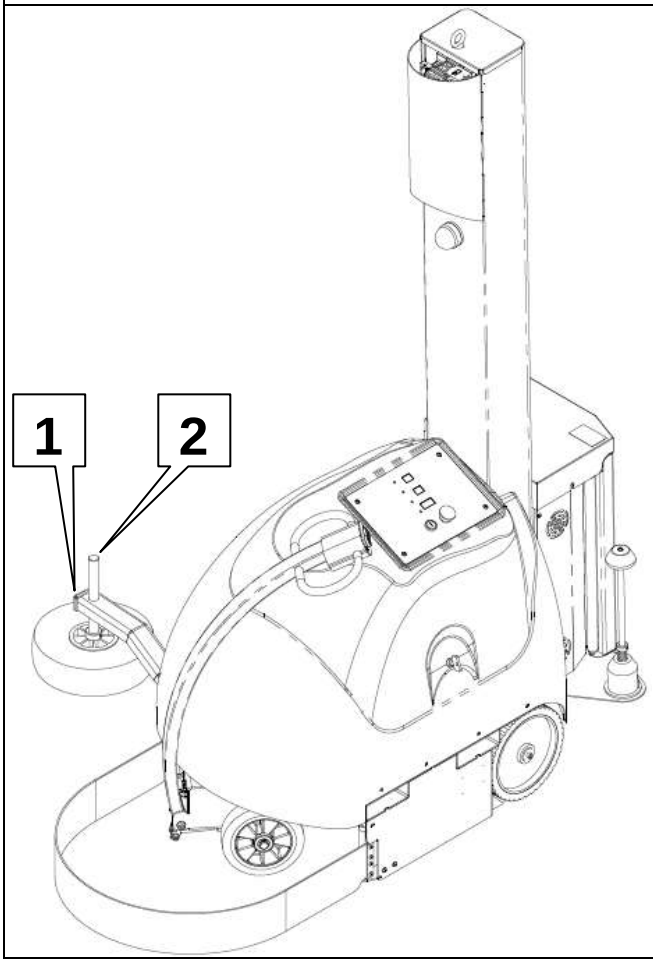

ASSEMBLY SEQUENCE

7. Steering force

The arm steering or closure is controlled by a spring (**3**) coupled to a bracket (**4**) secured to the steering arm.
The bracket (**4**) can be set in different positions (**5**) to adjust the spring tension.
To change the position, release the bracket (**4**) pulling it by the tab (**6**) and reset it in the desired position.

A more rigid spring results in:
- Greater steering force
- Greater driving arm rigidity during manual movements
- The risk of lightweight pallets moving on slippery flooring.

A less rigid spring results in:
- Reduced steering force
- Reduced driving arm rigidity during manual movements
- The risk that the robot does not correctly follow the outline of the pallet during high-speed wrapping.

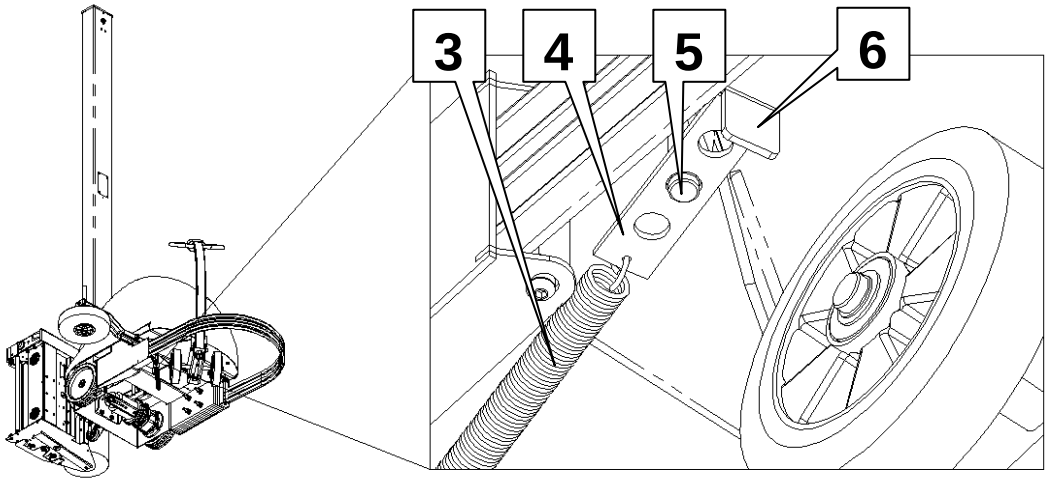

ASSEMBLY SEQUENCE

8. Mast H.2500 – H.2800

(**Fig 1**) Lift the mast (1) coupling it with a rope. Put the mast in the support (2) of the base, screw the bolts inside the carter. Remove the rope. Connect the plug.

(**Fig 2**) 1.Power supply driver carriage (red wire (P or +) and black wire (M or -)

2.Power supply carriage motor up/down (wire “U2” and “V2”)

3.Carriage signals

4.Cable for red light and for phonic wheel

5.Power supply robot

(**Fig 3**) At the end, final result

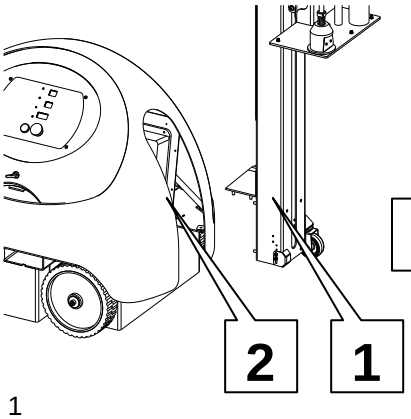

Fig 1

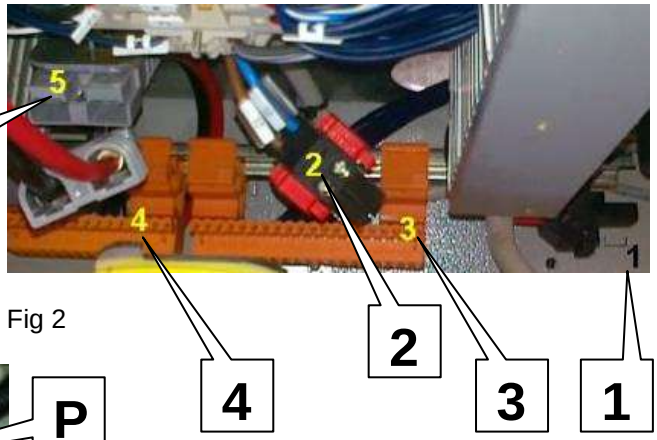

Fig 2

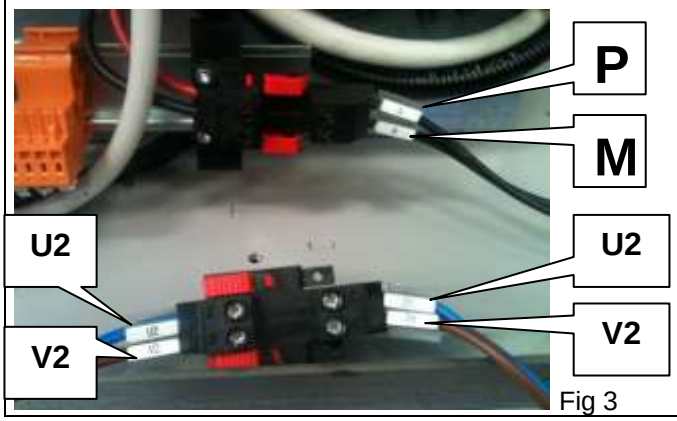

Fig 3

ATTENTION!

After the first installation
Follow procedure below before starting the machine

- Control if the emergency button is free
- Turn on the machine
- Wait 5 seconds and than make the first run in manual mode
- If the machine is running, follow procedure below

After installation or maintenance of the machine follow procedure below to check the efficiency of the safety devices, such as:

- ✓ **The interlocking of the mobile shock proof guard**
- ✓ **Emergency button**

Check for the efficiency of the interlocked shockproof flexible guard

- start the machine
- activate the interlocked operator guard

Check that the machine stops within a few fractions of a second

Check for the efficiency of the mushroom-head button

- start the machine
- press the emergency mushroom-head button

Check that the machine stops within a few fractions of a second

CONTROL PANEL

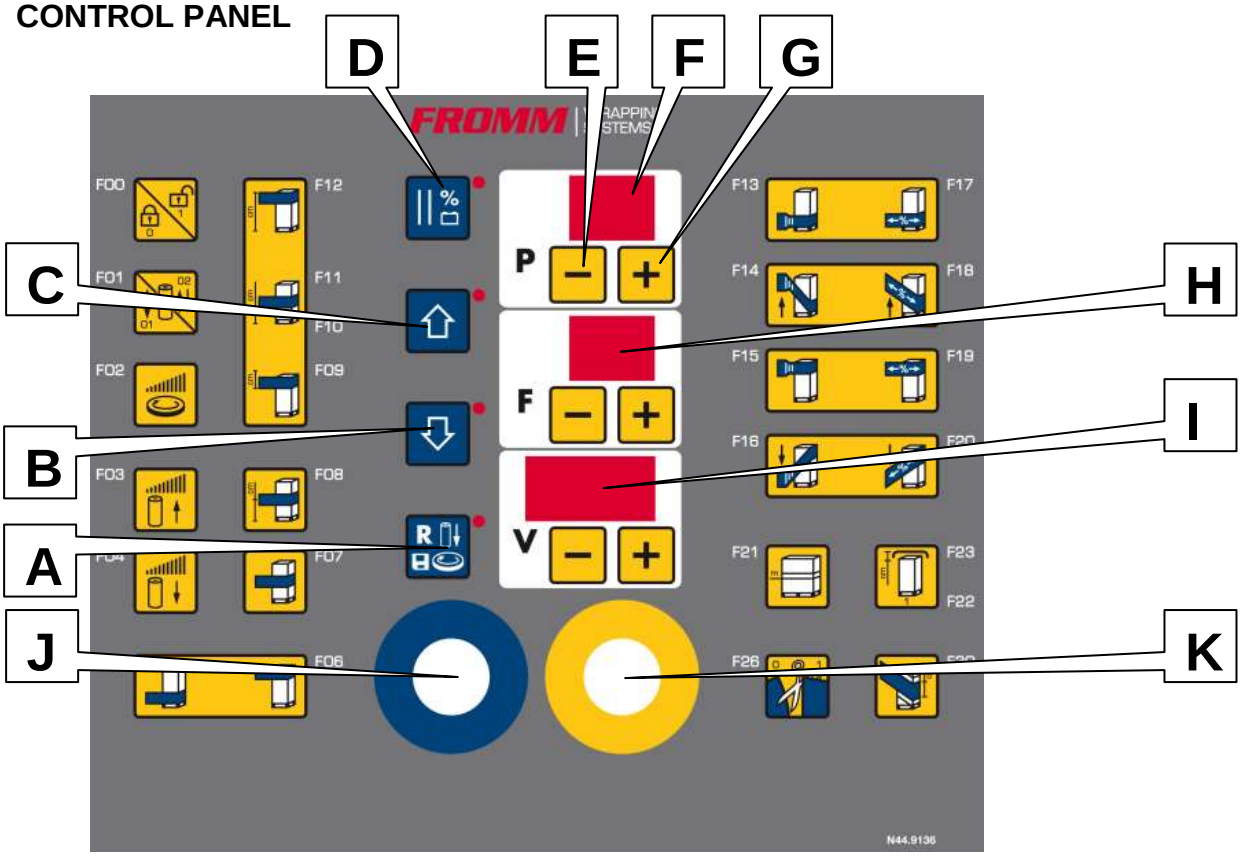

Figure 1: Console FR33x Generation V03 (Operating panel TWO)

A = **Board on - Cycle or alarm reset (if present) - Program storage**
B = **Hold-down button for manual carriage descent (pressed together with button** A**, the carriage automatically descends to the bottom cycle start position)**
C = **Hold-down button for manual carriage ascent**
D = **STOP button for cycle pause; the robot decelerates and stops; the cycle can be resumed from the same point**
LED On = Battery had to be charged; Hold-down button = % Battery charger
E = **Value decrease button**
F = **2-digit display for selected program**
G = **Value increase button**
H = **2-digit display for functions (parameters) of the selected program**
I = **3-digit display for the value of the function displayed**
J = **START button for programmed cycle**
K = **EMERGENCY BUTTON**

Alarms
The display V (I) **is used to indicate the alarms, at the same time the LED next to the RESET key** (A) **is flashing:**

E01: Emergency bumper pressed
E02: Failed starting (the robot does not turn)
E04: foot crushing emergency
E08: encoder block (the carriage is not moving)
E16: carriage door open
E32: Battery flat

The right side LED of the display V (I) will flash in case an EEPROM vailure has occurred.
Parameter cannot be memorized anymore and the EEPROM has to be substituted.
The Robot can be used in a normal way in case this occasion has occurred.

INDICATIONS

START-UP CYCLE ACTIVE

An acoustic signal device has been installed in the control cabinet, which will be activated first during some seconds as a warning every time before the AUTOMATIC PROGRAM is executed.
The operator will thus be able to leave the danger zone before the machine starts to operate.
The machine will only start to operate after this period has been elapsed.

RESET MACHINE

The automatic program of the wrapping machine is interrupted and a failure indication will be displayed on the console, when the emergency stop is activated or any other failure is detected.
Wrapping can only be started again after pushing reset on the control panel. Thus, the failure is reset and the control voltage is activated again, assuming that the mains switch still has been switched on. The cause of the failure has to be solved first, of cause.

BASIC OPERATING INSTRUCTIONS

 Left = 1 Right = 2	Using the buttons (**1**) and (**2**), move the robot alongside the product resting the reference wheel against it and make sure that the robot is positioned parallel with one of the sides of the pallet to be wrapped at a distance between 30 and 50 cm. From the opposite side of the stretch carriage extract the end of the film and attach it to the bottom of the product to be wrapped.

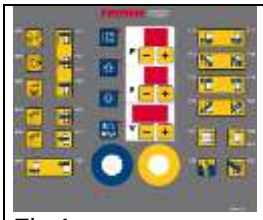 Fig 1	On the control panel (Fig 1) set the desired number of extra wraps around the bottom and top and press the green START button. The wrapping operation will automatically be carried out. (see section WRAPPING PROGRAMS)

Up to 100 program can be created. To copy the parameters of an existing program to a virgin program, select the source program and, holding down the reset button, select the target program. Release the reset button to copy all the parameters.

NB: **The virgin target program must always be released (**F00=1**)**

Button	Explanation
	F00 This parameter is used to prevent cycle parameters from being overwritten.
	F01 Film carriage movement : 01 Upwards and Downwards : Only upwards or only downwards : Not available with the Robot
	F02 Robot rotation speed : Selectable from 50 to 95 Mt/min;
	F03 Carriage ascent speed : Selectable from 0 to 100
	F04 Carriage down speed : Selectable from 0 to 100

BASIC OPERATING INSTRUCTIONS

	F05 Number of bottom wraps
	F06 Number of top wraps
	F07 Number of intermediate wraps F08
	F08 Height at which the wraps are performed F07, The height or reference point is the centre of the film (As the roll is 50 cm high, a value less than 25 cm cannot be set)
	F09 Strip of film placed over the top of the product
	F10 Height from where the wrapping cycle **begins**, Below part of the film coil is the reference point for this setting.
	F11 Height at which the wrapping cycle **ends**, Below part of the film coil is the reference point for this setting.
	F12 Height at which the carriage ascent stops. Top part of the film coil is the reference point for this setting. (By setting this parameter the photocell for reading pallet height will be disabled,
	F13 Film tension during bottom wraps of the wrapping cycle : Selectable from 0 to 100
	F14 Film tension during carriage movement up of the wrapping cycle : Selectable from 0 to 100

BASIC OPERATING INSTRUCTIONS

	F15 Film tension during Top wraps of the wrapping cycle : Selectable from 0 to 100
	F16 Film tension during carriage movement down of the wrapping cycle : Selectable from 0 to 100
	F17 Film “pre-stretch settings during bottom wraps of the wrapping cycle : Selectable from 120 to 400 **(Only in combination with carriage 7, two motor pre-stretch)**
	F18 Film “pre-stretch settings during carriage movement up of the wrapping cycle : Selectable from 120 to 400 **(Only in combination with carriage 7, two motor pre-stretch)**
	F19 Film “pre-stretch settings during Top wraps of the wrapping cycle : Selectable from 120 to 400 **(Only in combination with carriage 7, two motor pre-stretch)**
	F20 Film “pre-stretch settings during carriage movement down of the wrapping cycle : Selectable from 120 to 400 **(Only in combination with carriage 7, two motor pre-stretch)**
	F21 Special pallet cycle for big pallets (product perimeter) (default value = 4.0 m)
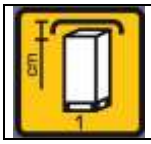	F22 Cycle with covering film : 1 Enabled : 2 Disabled
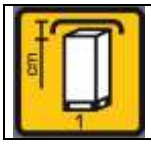	F23 Descend distance with activation of parameter F22 : Small top-sheets, low value : Big top-sheets, higher value

BASIC OPERATING INSTRUCTIONS

	F24	Thickness of film being used : Selectable from 10 to 35 micron **(Only in combination with carriage 6 & 7,one & two motors pre-stretch with optional weighing kit fitted)** Entering the thickness of the film within the range 10-35 micron means that the end of the cycle the amount of film used for the packaging can be determined.

	F25	Manual forward speed : Selectable from 0 to 40

	F26	Cycle with cutting (opt) : 0 Disabled : 1 Enabled

	F27	Cutting time after the phase : Selectable from 0 to 200 hundredths of a sec. Sets the position where film cutting and tensioning takes place during cutting

	F28	Film outfeed time after cutting : Selectable from 0 to 200 hundredths of a sec. Sets the amount of film that is fed out from the carriage after the film has been cut

	F30	Carriage ascent / descent step : Selectable from 0 to 50 step 1 : 0 Disabled >0 Enabled This function is used to enable the carriage ascent / descent by steps; the value set corresponds with the ascent distance for each turn (in cm). N.B.: the value set in F21 must be the same as the perimeter of the product

BASIC OPERATING INSTRUCTIONS

		Keyboard block: Prevents modification of parameters by blocking the keys V+ e V- Hold down RESET and at the same time press F+ and F- The right-hand LED of the display V lights up and stays lit.	
	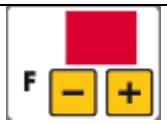	Keyboard release: Hold down RESET and at the same time press F+ and F- The right-hand LED of the display V turns off and stays turned off.	
		Loading of parameters: Takes place automatically by selecting the desired Program.	
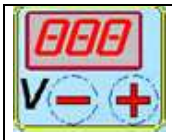		Saving of parameters: If the left-side LED of buttons “V” is turned off, press the RESET key for more than 3 seconds. The Left side LED will start to flash rapidly to indicate that the parameters have been saved.	
		Up to 100 programmes can be created: To copy the parameters of an existing program to an virgin program, select the source program, <u>next:</u> Hold down the reset button and select the target program. After this has been done, release the reset button and the OP will copy all the parameters. NB: The virgin target programme must always be released (F00=1)	
		Automatic saving of last program used: When the machine is turned on again, the parameters from the last program selected and started will be loaded.	

DISPLAY "V”

	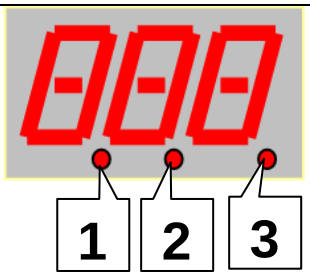	1: FLASHING : saving of parameters ON: programme in reading mode only (F00=0) OFF: programme in reading and writing mode (F00=1) 2: Displays the decimal point of the parameter 3: FLASHING: EEPROM fault ON: keyboard blocked (V+ and V- blocked) OFF: keyboard released

BASIC OPERATING INSTRUCTIONS

Signals

The left-side LED on the V display indicates the writing protection status of the selected program.
If turned on, it is not possible to rewrite the modified parameters.

It is necessary to select the parameter F00 on the same program to carry out modifications.

Set the value 1 in this parameter, then hold down RESET for at least 3 seconds.
The program is now open and ready to be changed.

Set the value 0 in this parameter, then hold down RESET for at least 3 seconds.
The program is blocked closed and cannot be changed anymore.

	The LED next to the MANUAL CARRIAGE RISE indicates the automatic command of the carriage rise. Press this button together with the RESET button and the carriage starts to move.

	The LED next to the MANUAL CARRIAGE DESCENT indicates the automatic command of the carriage descent. Press this button together with the RESET button and the carriage starts to move.

STARTING AND STOPPING OF THE ROBOT WRAPPING CYCLE

Automatic run mode with settable cycles
Activate this run mode, after the machine has been turned on and the safety conditions have been complied with, by pressing the START pushbutton provided that the corresponding work cycle has been set via the pushbutton panel.

- Check for the charge condition of the battery on the control panel
- If the battery was charged beforehand, disconnect the battery charge cable from the socket
- Check that the reel is present on the corresponding reel-holding shaft and that the film's path is correct as shown in the diagram
- Check for the position of the feeler wheel and adjust it, if need be, along the sliding shaft using the lock screw
- Grasp the handlebar and press the forward start pushbutton
- Set the feeler wheel against the product arranged on the pallet
- Manually remove the lead edge of the film from the reel and attach to one of the pallet's corners
- Set the wrapping cycles on the control panel according to the modes outlined in
- Press the START pushbutton
- when the wrapping cycle is finished, manually cut the film and set the adhesive side against the pallet
- the pallet is ready to be picked up

ATT. The acoustic signal is active during approximately 3 seconds before the automatic wrapping cycle will be executed. The machine will only start to operate after this period has been elapsed.

N.B. The automatic wrapping cycle is only started, if the start conditions are fulfilled.
A failure indication is displayed, if not all start conditions are fulfilled.
The start conditions for the automatic wrapping cycle are:

- One of the WRAPPING PROGRAMS should be selected;
- Photocell "pallet height" should be activated;
- Emergency stop not activated;
- The interlocking of the mobile flexible strap;
- No failure detected;

Immediate stop

This stop is commanded as follows:
- By pressing the stop pushbutton
- By pressing the emergency mushroom-head button
- By pressure exerted on the front flexible strap
- By the presence of an alarm that commands the immediate stop.

This stop mode envisages:
- The immediate stop of machine

NOTE: with this type of stop the machine can restart from the operating point in which it had stopped by, pressing the start button.

WRAPPING PROGRAMS

F01=02
1. Single wrapping
After the pre-set number of bottom wraps have been completed, while the machine is running, the film carriage will go upwards. When the film carriage has arrived on top and the pre-set number of top wraps has been completed, the machine will halt. The film can be cut now on top.
After pushing start again the machine restarts with an descend only program.

F01=01
2. Double wrapping
The complete (double) wrapping program will be executed with this function. After completing the pre-set number of bottom wraps the film carriage will go upwards, then it halts to lay the top wraps, while the machine keeps running, and then it will go downwards again. Another number of pre-set bottom wraps is laid, after which the machine will halt. Now the film can be cut and the pallet can be transported.

F22=1
3. Double wrapping + TS
After the pre-set number of bottom wraps has been completed, while the machine is running, the film carriage will go upwards. When the film carriage has arrived on top it first, lays approx. 1 top wrap, move downwards and wait until the top sheet has been laid.
To change the decrease distance alter the DIGITAL VALUE-SETTING
With + or – in the chapter BASIC OPERATION INSTRUCTIONS
After pushing start the film carriage will go upwards again and wrapping in the top-sheet, after this the film carriage will go downwards again. Another number of pre-set bottom wraps is laid, after which the machine will halt. Now the film can be cut and the pallet can be transported

F07
4. Stiffed wrapping
The complete (double) wrapping program will be executed with this function. After completing the pre-set number of bottom wraps the film carriage will go upwards. At a certain pre indicated height.
To change this parameter alter the DIGITAL VALUE-SETTING With + or –
in the chapter BASIC OPERATION INSTRUCTIONS. The film carriage will halt and puts extra layers of film on the pallet then it halts to lay the top wraps, while the machine keeps running, then it will go downwards again. Another number of pre-set bottom wraps is laid, after which the machine will halt. Now the film can be cut and the pallet can be transported

F10 & F11
5. Pre set height
The complete (double) wrapping program will be executed with this function. *The starting height of the film-carriage can be adjusted, by altering the DIGITAL VALUE-SETTING With + or – in the chapter BASIC OPERATION INSTRUCTIONS.*
After pushing start the film-carriage will go up until the pre-installed height. Than the film-carriage will halt to give the opportunity to fix the stretch-film to pallet. After pushing start again the machine will complete the pre-set number of bottom wraps, the film carriage will go upwards. then it halts to lay the top wraps, while the machine keeps running, after this it will go downwards again. Another number of pre-set bottom wraps is laid, at the pre fixed starting height, after which the machine will halt. Now the film can be cut and the pallet can be transported

F12
6. Double wrapping
See program 2 with one exception. In this program you can pre set the pallet-height with by changing the parameters on the control cabinet. This program is special made for goods witch cannot be read by the photoelectric sensor.

ERRORS DURING OPERATION

THE ROBOT DOESN'T SWITCH ON

Problem suggestion		Possible solution
- Is hold the mushroom-head button		- Turn it off. Press the switch on ((Look the "CONTROL PANEL", letter "A")
- Batteries disconnected		- Connect the battery
- Battery charger connected with the plug		- Disconnected it
- Fuse FU1 burnt		- Replace it
- Fuse burnt on the Pc-Board		- Replace it
- Fuse burnt on the Pc-Board		- Replace it
- Pc-Board broken		- Replace it Attention: before to send the Pc-board for the reparation, remove the Eeprom (**Fig 1**). When you remove it, don't touch the teeth of the Eeprom because you may delete the software
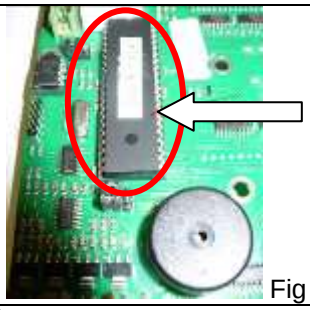 Fig 1		

Should the problem persist, contact the Customer After-Sales Service of MANUFACTURER

THE CARRIAGE DOES NOT STOP AT THE LOWER OR UPPER LIMIT STOP MICROSWITCH

Problem suggestion		Possible solution
- Micro switches are not connected properly		- Check the wiring
- Micro switch malfunctioning		- Control the distance Micro – bracket on the mast (**Fig 1**) - Replace the Micro switch N5.2373
- Carriage doesn't wrap at floor level		- Check for the position of the lower bracket by adjusting the respective screws
 Fig 1		

Should the problem persist, contact the Customer After-Sales Service of MANUFACTURER

THE ROBOT START TO WORK BUT THE CARRIAGE GO UP ONLY FOR A FEW CENTIMETER AND COMPLET THE CYCLE

Problem suggestion		Possible solution
- The photocell don't read the pallet		- The pallet is low - Clean the photocell - Cover the photocell and look the Led on it and the LED for the wire 03 JP3 (Switch on) - Work with F12 (Control Panel) - Photocell for black film?

Should the problem persist, contact the Customer After-Sales Service of MANUFACTURER

THE ROBOT START TO WORK BUT THE CARRIAGE GO UP OVER THE TOP OF THE PALLET

Problem suggestion		Possible solution
- The photocell read reflection of light		- Clean the photocell - Decreases the sensitivity of the photocell

Should the problem persist, contact the Customer After-Sales Service of MANUFACTURER

CHARGE THE BATTERY FOR 8-10 HOURS AND AFTER A FEW PALLET THE BATTERY CHARGER SHOW ORANGE LED

Problem suggestion		Possible solution
- The battery is not completely charge		- Check all the connections (battery-battery charger) - Check the "Dip Switch Configuration" in Version 03 (**Fig 1 & Fig 2**) - Discharger completely the battery. Charger again the battery for 8-10 hours (finally shows=green led, in Version 03 and 100% in Version 04, Fig.3) Check with the tension meter the voltage of the two batteries, max voltage must be 27 Volt. The tension between the two batteries must be the same, if isn't so, the battery that has less voltage has a part in "short-circuit". Look the "Operating manual" for the "Electronic battery charger".
 Fig 1	 Fig 2	 Fig 3

Should the problem persist, contact the Customer After-Sales Service of MANUFACTURER

THE FILM TENSION DOES NOT CHANGE WITH CARRIAGE 2

Problem suggestion		Possible solution
- Film feed in the wrong way		- Guide the film through the brake system according to the drawing on top of the carriage (**Fig 1**)
- Friction not connected properly - Carriage makes noise at the top part		- Friction has to be repositioned or replaced (**Fig2**) FR3.1095
- Hand-wheel not connected properly		- Check the thread of the screw (**Fig3**) - Replace the Hand-wheel FR3.1188
 Fig 1	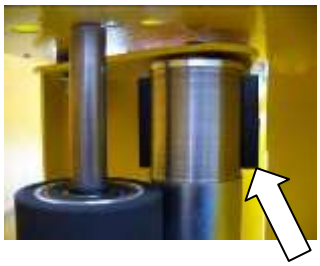 Fig 2	 Fig 3

Should the problem persist, contact the Customer After-Sales Service of MANUFACTURER

THE FILM TENSION DOES NOT CHANGE WITH CARRIAGE 4

Problem suggestion		Possible solution
- Film feed in the wrong way		- Guide the film through the brake system according to the drawing on top of the carriage (**Fig 1**)
- Tension on the film doesn't work properly		- Check the value for the tensioning on the Pc-board (F13-F16) - Check of the black roller can be moved by hand. (**Fig 2**) - Check the quality of film.
- Electromagnetic brake doesn't work properly		- Check the wiring - Check the electromagnetic clutch (**Fig 3**) - Replace the electromagnetic clutch FR3.1101 - Check the power supply (**Fig 3**) - Replace the power supply FR3.1103
 Fig 1	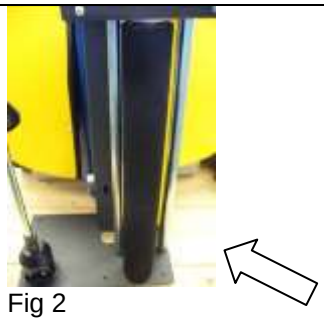 Fig 2	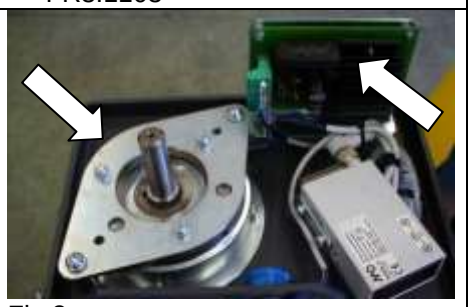 Fig 3

Should the problem persist, contact the Customer After-Sales Service of MANUFACTURER

THE FILM TENSION DOES NOT CHANGE WITH CARRIAGE 6

Problem suggestion		Possible solution
- Film feed in the wrong way		- Guide the film through the brake system according to the drawing on top of the carriage (**Fig 1**)
- Tension on the film doesn't work properly		- Check the value for the tensioning on the Pc-board (F13-F16) - Check the wiring (**Fig 2a**) - Check if the screw/black plastic magnet is at the correct distance (10-15mm) from the power supply (**Fig 2a**) The plastic magnet has a right side and when it approaches at the sensor, the pulley (**Fig 2b**) on the motor rotates. - Check the power supply (**Fig 2c**) - Replace power supply FR3.1153
- The pulley on the motor for the tension is blocked		- Approach the dancer roller at the sensor (**Fig 3a**) and at the same time read how many flash light makes the "Diagnostic" of the inverter (**Fig 3b**) <u>If the led blinks 4 times:</u> Check the connection; Check the brushes of the motor. - Replace the motor (**Fig 3b**) N51.1114
 Fig 1	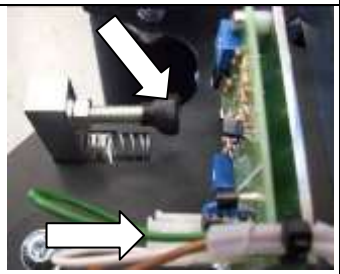 Fig 2a 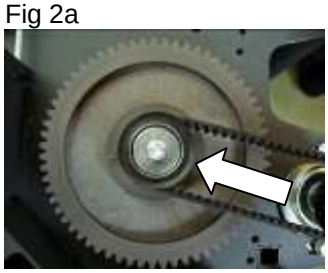 Fig 2b 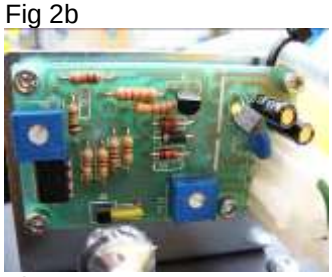 Fig 2c	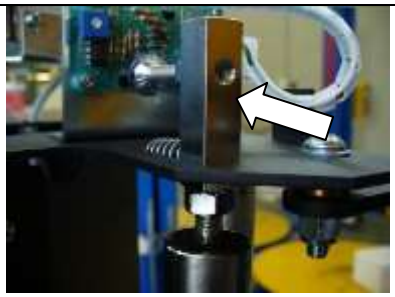 Fig 3a 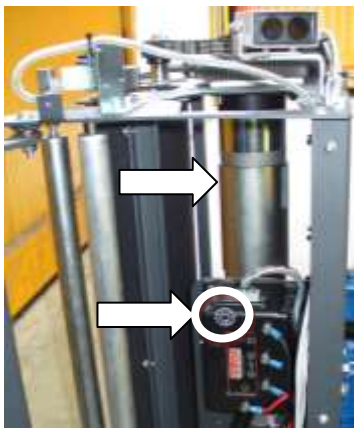 Fig 3b

Should the problem persist, contact the Customer After-Sales Service of MANUFACTURER

THE FILM TENSION DOES NOT CHANGE WITH CARRIAGE 7

Problem suggestion		Possible solution
- Film feed in the wrong way		- Guide the film through the brake system according to the drawing on top of the carriage (**Fig 1 C6)**
- Pre-stretch on the film doesn't work properly		- Check the value for the pre-stretch on the Pc-board (F17-F20) - Check the wiring - Check if the screw/black plastic magnet is at the correct distance (10-15mm) from the power supply The plastic magnet has a right side and when it approaches at the sensor, the pulley (**Fig 1**) on the motor rotates. - Check the power supply - Replace power supply FR3.1153
- The pulley on the motor for the pre-stretch is blocked		- Approach the dancer roller at the sensor and at the same time read how many flash light makes the "Diagnostic" of the inverter <u>If the led blinks 4 times:</u> Check the connection; Check the brushes of the motor. - Replace the motor (**Fig 2**) N51.1113
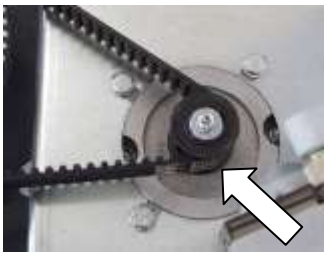 Fig 1	 Fig 2	

Should the problem persist, contact the Customer After-Sales Service of MANUFACTURER

<u>ATTENTION: IN THE CARRIAGE 6 AND CARRIAGE 7 PROPERLY CLOSE THE DOOR</u>

Be careful to properly close the doors at the bottom and the top of the carriage. The sprockets must be perfectly aligned and the teeth stuck well,otherwise you can damage the teeth of the sprockets (Fig 3).

CARRIAGE 6	CARRIAGE 7	
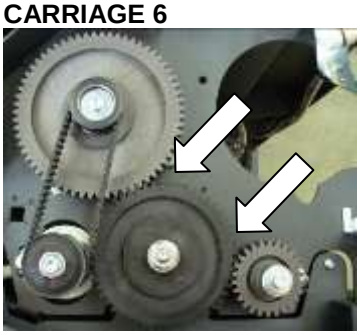 Fig 1	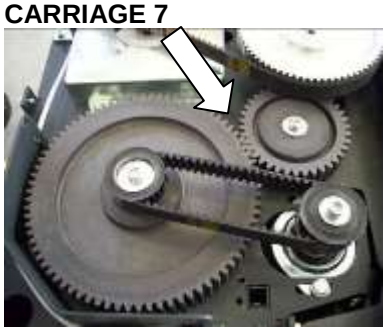 Fig 2	 Fig 3

POSSIBLE ERRORS AT THE FIRST TIME INSTALLATION!

Problem suggestion	Possible solution
- The Robot shows the error **E01** (Emergency bumper pressed)	- The micro switch under the robot is not positioned in the correct way **Fig 1**). The tip of the micro switch has to be positioned at the center of the cam. To fix the micro switch to the robot.
- The Robot shows the error **E08** (Encoder block, the carriage is not moving)	- Check all the connections (**Fig 2a e Fig 2b**)
- The charging cycle does not start and the message "**bat**" is displayed	- Check the connection to the battery and the polarity (**Fig 3**)
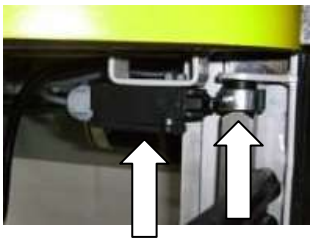 Fig 1	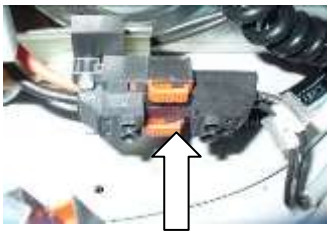 Fig 2a 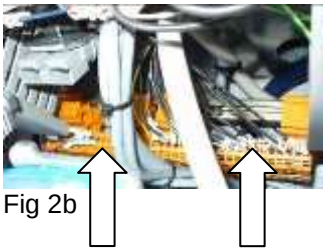 Fig 2b
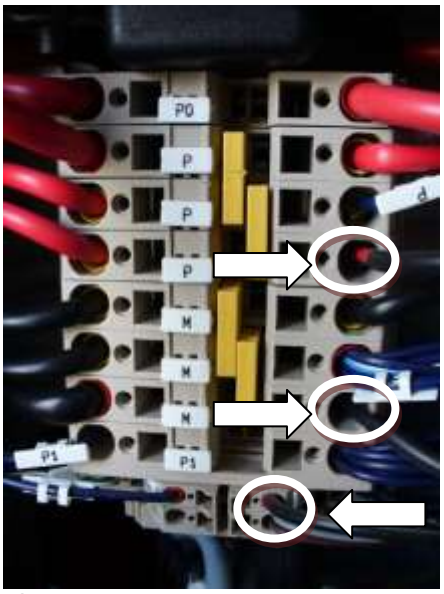 Fig 3	

Should the problem persist, contact the Customer After-Sales Service of MANUFACTURER

ALARMS

		**The V display is used for showing the alarms, noted at the same time by the flashing LED next to the key RESET:** The right side LED will ONLY flash if there is a fault in the non-volatile parameters memory; if the alarm remains after turning on and off the device several times, it is necessary to substitute the EEPROM. Meanwhile the machine functions normally, however parameters cannot be saved.

E01: Emergency bumper pressed
E02: Failed starting (The robot does not drive)
E04: Foot crushing emergency
E08: Encoder block (the carriage is not moving)
E16: Carriage door open
E32: Battery flat

E01- EMERGENCY BUMPER PRESSED

Problem suggestion		Possible solution
- An obstacle has stopped running the robot		- Remove the obstacle in front of the robot and press reset.
- The micro switch doesn't work properly		- The micro switch under the robot is not positioned in the correct way **Fig 1**). The tip of the micro switch has to be positioned at the center of the cam. To fix the micro switch to the robot. - Check all the connections.

Should the problem persist, contact the Customer After-Sales Service of MANUFACTURER

E02- FAILED STARTING (The robot does not drive)

Problem suggestion		Possible solution
- Proximity doesn't work properly		- Check the LED for the wire 103 JP6 - Check the LED for the wire 07 JP7 (switch on, the proximity read) - Adjust the distance between the proximity and the phonic wheel (2-3mm) - Check the connections. - Replace the proximity.
- In the manual function "forward/backward traction", the robot doesn't move		- Check the LED for the wire 104 JP11 (switch on-24V)
- The motor brake is off, but the motor doesn't start		- Check the tension on the inverter U1-V1 - Check the tension between inverter and motor - Check if the tension reaches the inverter When switch on the robot, the "Diagnostic" in the inverter blinking
- The motor brake is off, the tension reaches the motor, but the motor doesn't start		- Check the motor brushes - Replace the motor - Replace the gearbox

Should the problem persist, contact the Customer After-Sales Service of MANUFACTURER

E04- FOOT CRUSHING EMERGENCY (Function not available with the robot)

Problem suggestion		Possible solution
- Foot crushing emergency doesn't work properly		- Check the bridge between JP8 and JP9

Should the problem persist, contact the Customer After-Sales Service of MANUFACTURER

E08- ENCODER BLOCK (The carriage is not moving)

Problem suggestion		Possible solution
- Proximity doesn't work properly		- Check the LED for the wire 100-101 JP6 - Check the LED for the wire 08 JP7 (switch on, the proximity read) - Adjust the distance between the proximity and the phonic wheel (2-3mm) - Check the connections. - Replace the proximity.
- The motor doesn't work		- Check the tension on the inverter U1-V1 - Check the tension between inverter and motor - Check if the tension reaches the inverter When switch on the robot, the "Diagnostic" in the inverter blinking
- The tension reaches the motor, but the motor doesn't start		- Check the motor brushes - Replace the motor - Replace the gearbox

Should the problem persist, contact the Customer After-Sales Service of MANUFACTURER

E16- CARRIAGE DOOR OPEN

Problem suggestion		Possible solution
- The Carriage 2 and 4 are without door		- Check the bridge on the connection XC1 poles 5 and 7
- The door in the Carriage 6 and 7 is open		- Check if the door is properly closed - Check the LED for the wire 09 JP9 (switch on, the micro switch read)
- Micro switch doesn't work properly		- Check the tension between wire 09 JP9 and pole P1 - Replace the micro switch

Should the problem persist, contact the Customer After-Sales Service of MANUFACTURER

E32- BATTERY FLAT

Problem suggestion		Possible solution
- Battery flat		- Check the led on the OP (Look the "CONTROL PANEL", letter "D")

THE BATTERY CHARGER SHOWS THE WORD "bat"

Problem suggestion		Possible solution
- The charging cycle does not start and the message "bat" is displayed		- Check the connection to the battery and the polarity Look the "Errors first installation" Look the "Operating manual" for the "Electronic battery charger"

INSERTING THE FILM

Place the new film reel (direction of unwinding depends on the side on which the cling is found).
Guide the film through the brake system according to the drawing on top of the carriage.

Arrows on the inside of the roll means:
CI = CLING INSIDE
The film has to be guided through the brake system in this way when applying a "differential cling"-film with the cling on the inside of the film when unwinding the film from the film reel.

Arrows on the outside of the roll means:
CO = CLING OUTSIDE
The film has to be guided through the brake system in this way when applying a "differential cling"-film with the cling on the outside of the film when unwinding the film from the film reel.

The way of guiding the film through the brake system when applying a "double sided cling"-film is basically not relevant.

Stretchfilm	- LLDPE Material	Max 27 µ / 0,000106”
	- Spool core diameter	76,2 mm / 3”
	- Outer diameter of spool	Max. 250 mm
	- Film width	Max. 500 mm

BATTERY CHARGER / BATTERY "Version 03"

GENERAL INFORMATION AND WARNINGS

- Electronic automatic battery charger with microprocessor suitable for any battery type;
- Fully automatic charging cycle with electronic setting: protected against overload, short-circuit at clamps and reversed polarity;
- Never disconnect the battery while charging: this could cause sparks;
- Never use the equipment in the rain, in areas used for washing or in damp areas;
- Before starting to charge, make sure the voltage of the equipment suits the voltage of the battery, that the charging current suits the capacity of the battery and that the selected charging curve (for lead-acid batteries or airtight gel batteries) is correct for the type of battery to be charger. In addition, make sure the rated input voltage of the charger suits the avaible supply voltage and the system is equipped with grounding;
- If necessary, replace the fuse with another of the same type and value as indicated on the rating plate;
- Use battery chargers only in well ventilated areas;
- Pay attention to any remarks of the battery manufacturer.

For lead-acid batteries with liquid electrolyte:

- Control the water lever after each charging process;
- Refill with distilled water only;
- Caution! The gases generated during charging are explosive. Do not smoke in the vicinity of the batteries. When working with cables and electrical equipment, avoid open lames and sparks;
- Attention: use protective glasses and gloves during battery maintenance. Battery acid causes injuries. In case of contact with battery acid, wash the affected parts with a lot of fresh water and consult a doctor if necessary.

TECHNICAL FEATURES OF THE CBHF1-SM SERIES (Robot FR3xx/FR4xx)

The innovative characteristics of the CBHF1-SM range of battery charger are the following:

1. Advanced Mosfet technology with **high frequency** and insulation transformer.
2. Charging process fully controlled by microprocessor.
3. Visualization on a lit display of the charging current, of the battery voltage, of the charging time, of the electric charge supplied in Ah's and of the electric energy absorbed in KWh's.
4. Possibility to change the charging curve by means of microswitches (DIP-switches), choosing from 16 standard pre-programmed curves for lead-acid, Gel and VRLA batteries.
5. Possibility to change the battery voltage and the charging current by means of the relevant microswitches.
6. Charging process starting in the "soft start" mode, storing of the data of the cycle just finished and automatic reset upon connection of a new battery.
7. Protection against polarity inversions, short-circuits, over-voltages or anomalies by means of an output relay.
8. Battery to battery charger connection without sparks on the output terminals with obvious advantages for the active safety, thanks to the recognition of the battery voltage downstream the normally opened output relay.
9. Alphanumeric signals of possible anomalies.
10. Insensitive charge parameters in case of ±10% network voltage
11. Efficiency > 85%.
12. Output ripple at maximum charge lower than 100mV.
13. Start of the charge cycle also with 2V batteries.
14. Thermal protection against over heating.
15. An auxiliary relay that permits the partial or total disconnection of an electric traction machine is available in should the batteries have to be re-charged with the battery charger placed on board the machine. In this way the relay prevents the machine from starting while the battery charger is operating. This is a safety device.

OPERATING PRINCIPLE

On switching on a new battery charger of the CBHF1-SM series, programmation data are displayed (these parameters depend on internal dipswitch configuration).
After the **"SPE"** logo you can see on display the version of software installed on the machine. At this time the following programmed parameters are displayed on sequence according to internal dipswitch configuration (see tables on page n. 4):
battery voltage, charging current, number of charging curve and is displayed the message **"GEL"** if programmed charging curve is suitable for gel batteries or **"Acd"** if programmed charging curve is suitable for Lead-Acid (Wet) batteries. After these operations the charger is ready to check the battery voltage and to decide whether to start the charging process. If the battery is not connected to the battery charger, the message '*bat*' will be displayed. The same message is displayed also in case of negative result of the testing (for example, reversed polarity or battery having a wrong voltage). If the result of the testing is positive, the value of the battery voltage is displayed for about 5 seconds, with output relay open. After 5 seconds the charging of the battery can start. The output relay closes and the current of the first phase rises slowly till it reaches the nominal value programmed.
If the user disconnects the battery from the battery charger during the charging process, after a few seconds the battery charger will re-initialize and prepare to start a new charging process.
The display always shows the charging current of the battery. The battery voltage, the time since the beginning of the charge, the charge yielded in Ah's and the energy consumed in KWh can be seen only by pressing the button S.
The progress of the charging process is shown by three LED's: red, yellow and green, as in the whole range of the battery chargers.
The green LED indicates the stop of the charging or the last phase in case of deep charging process; in the former case, the relay is opened to disconnect galvanically the battery from the battery charger.

Technical remarks

- When the maximum voltage admissible for a specific battery is reached (value given by the manufacturer) the error message ***'E01'*** is displayed, and the process is terminated.
- By using an internal thermostat, the charging can be interrupted in case of excessive battery charger over-temperature. In this case the error message ***'E02'*** is displayed.
- Possibility of setting each single charging phase. On exceeding this time, the charge will be interrupted and the error message **'E03'** will be displayed.
- The display of the message **'SCt'** indicates safety timer operation.
- The message **'Srt'** will be displayed in case of internal short circuit.

TRAXION BATTERY

www.exide.com

12ELEM.2EPZS100 24VAH5 (100Mah)
12/2 EPzS 120, 24 V, 120 Ah/5h (120Mah)
Dimensions: 580 x 215 x 390 L x W x H (Battery housing has to be an steel box)

AGM BATTERY

www.exide.com

AGM ZENITH BATTERY 2x 12V 106Ah
Dimensions: 307 x 169 x 237 L x W x H

Do you want to change the battery?
Here below the instructions (from AGM batteries to Traxion battery).
The connections of the traxion battery are the same those of the AGM battery.
When you remove the AGM batteries, also remove the bridge between them.
So, in the robot you have only 2 cables (+ and -) and the clamps are ok also for the traxion battery.
You have only to change the charging curve (look at the next pages).

BATTERY CHARGER CBHF1-V2

By setting up 8 dipswitches it is possible to change the charging curve and it is possible to customize the charging profile with the specifications of battery manufacturers.
The battery voltage (12V or 24V) and the charging current (4A or 8A or 10A or 14A) can be setup.
The set of 8 dipswitch is easy to find and is s located under the front label of the charger, lifting the corner on the bottom-left, without opening the charger.


In the following tables you can find the explanation for different positions of the dipswitches, enabling you
to program CBHF1-V2 battery chargers.

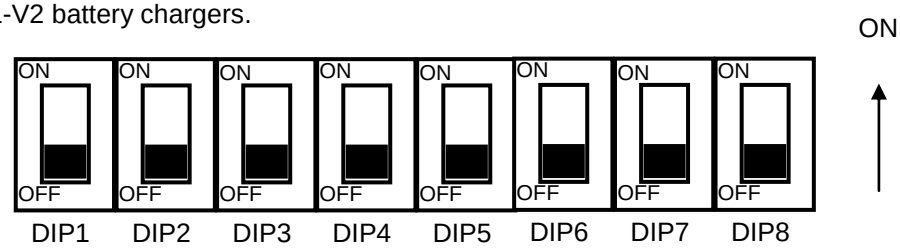

- DIP1 / DIP2 / DIP3 / DIP4 for the selection of the CHARGING CURVE ***GEL / AGM*** (Check also next page!)

DIP1	DIP2	DIP3	DIP4	CHARGING CURVE
ON	OFF	OFF	ON	Lead-acid and GEL batteries

- DIP5 / DIP6 / DIP7 for the selection of the CURRENT I1

DIP5	DIP6	DIP7		CURRENT
OFF	OFF	ON		14A

- DIP8 for the selection of the battery voltage

DIP8		VB
OFF		12

- DIP1 DIP2 DIP3 DIP4 for the selection of the CHARGING CURVE ***TRACTION*** (Check also next page!)

DIP1	DIP2	DIP3	DIP4	CHARGING CURVE
ON	ON	OFF	ON	Lead-acid (Wet) traction batteries)

- DIP5 DIP6 DIP7 for the selection of the CURRENT I1

DIP5	DIP6	DIP7		CURRENT
OFF	OFF	ON		14A

- DIP8 for the selection of the battery voltage

DIP8		VB
OFF		24

PRE-PROGRAMMED CURVES FOR CBHF1-SM

	CURVE	CURVE TYPE	DIPSWITCH DP1-DP2-DP3-DP4
	00	**IUa SO (IUa + float charge 2,30VPC) = IUUo** Technology for charging DRYFIT TRACTION BLOCK (TRACTION GEL batteries). In compliance with the DIN 41773 regulations.	ON-ON-ON-ON
A	01	**IUIa Lead-Acid** Technology for charging TRACTION Lead-Acid batteries.	OFF-ON-ON-ON
A	02	**IUUa (2,45VPC)** Technology for charging SEALED LEAD-ACID batteries.	ON-OFF-ON-ON
A	03	**IUUa (2,40VPC)** Technology for charging Sealed Lead-acid and GEL batteries batteries from Trojan and other manufacturers.	OFF-OFF-ON-ON
B	04	**IUIa Lead-Acid + float charge at 2,30VPC** Technology for charging TRACTION lead-acid batteries.	ON-ON-OFF-ON
B	05	**IUUa (2,45VPC) + float charge at 2,30VPC** Technology for charging SEALED LEAD-ACID batteries.	OFF-ON-OFF-ON
B	06	**IUUa (2,40VPC) + float charge at 2,30VPC** Technology for charging Sealed Lead-acid batteries and GEL batteries from Trojan and other manufacturers.	ON-OFF-OFF-ON
	07	**IUIa PzV** Technology for charging large capacity DRYFIT PzV (A800) GEL batteries. In compliance with the DIN 41773 regulations.	OFF-OFF-OFF-ON
	08	**IUIa GNB** Technology for charging GNB Sealed Lead-Acid batteries.	ON-ON-ON-OFF
	09	**IUo (2,35VPC)** Technology for charging Lead-Acid start-up batteries.	OFF-ON-ON-OFF
	10	**IUIa drysafe (HAGEN)** Technology for charging DRYSAFE HAGEN batteries.	ON-OFF-ON-OFF
	11	**IUIa per TRACTION BLOCK + float charge 2,30VPC** Technology for charging DRYFIT TRACTION BLOCK batteries from Sonnenschein, DETA and other manufacturers. In compliance with the DIN 41773 regulations. (This curve is an alternative of curve 00)	OFF-OFF-ON-OFF
	12	**IUa for Lead-Acid batteries (2,40VPC)** Technology for charging Lead-Acid starting batteries with stop.	ON-ON-OFF-OFF
	13	**Iua for Lead-Acid batteries (2,60VPC)** Technology for charging Lead-Acid starting batteries with stop.	OFF-ON-OFF-OFF
	14	**---**	ON-OFF-OFF-OFF
	15	**---**	OFF-OFF-OFF-OFF

NOTES:

A: charging curves with charge stop.
B: charging curves equivalent to group A but with a float charge of 2,30VPC (maintenance charge).

KIT EXTERNAL ELECTRONIC BATTERY CHARGER V02 (optional, FROMM code **16.8288**)

This kit can be used for AGM / GELL and TRAXION batteries of all brands. It is important to check the charger settings “dipswitches”. The settings need to be correct, in order to guarantee a correct charging curve. Every type of battery has its own curve!
Check the document CHARGER CONFIGURATION below. (You have to be logged in at our website to download this information.

http://www.fromm-stretch.com/Pages/Download.aspx?DownloadID=759

Set 16.8288 existing of:
1x FR3.1293 Charger
1x FR3.1292 Cable
1x FR3.1291 Cable

Item FR3.1293
Battery charger CBHF1 V2 24V 14A

Item code FR3.1293

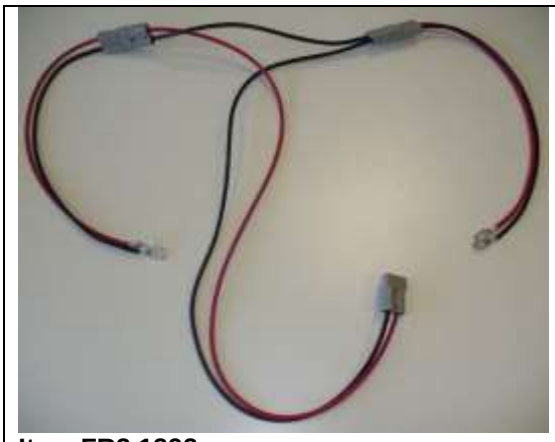

Item FR3.1292
Long “optional” cable to be used in combination with the kit external
battery charger Code. 16.8288

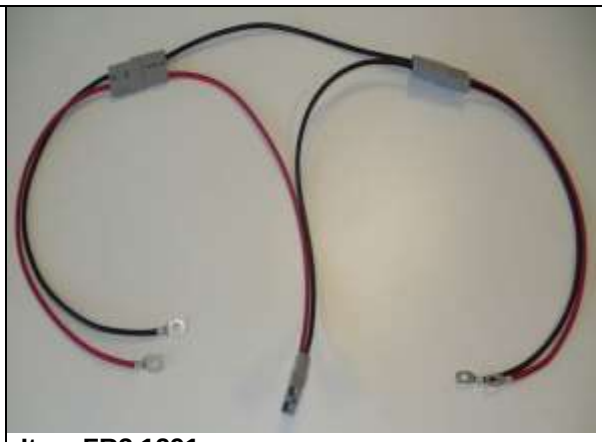

Item FR3.1291
Short cable for battery connection in the Robot. (Standard cable supplied with the machine, this code is not a part of the kit 16.8288)

BATTERY CHARGER / BATTERY "Version 04"

GENERAL INFORMATION AND WARNINGS

- Electronic automatic battery charger with microprocessor suitable for any battery type;
- Fully automatic charging cycle with electronic setting: protected against overload, short-circuit at clamps and reversed polarity;
- Never disconnect the battery while charging: this could cause sparks;
- Never use the equipment in the rain, in areas used for washing or in damp areas;
- Before starting to charge, make sure the voltage of the equipment suits the voltage of the battery, that the charging current suits the capacity of the battery and that the selected charging curve (for lead-acid batteries or airtight gel batteries) is correct for the type of battery to be charger. In addition, make sure the rated input voltage of the charger suits the avaible supply voltage and the system is equipped with grounding;
- If necessary, replace the fuse with another of the same type and value as indicated on the rating plate;
- Use battery chargers only in well ventilated areas;
- Pay attention to any remarks of the battery manufacturer.

For lead-acid batteries with liquid electrolyte:

- Control the water lever after each charging process;
- Refill with distilled water only;
- Caution! The gases generated during charging are explosive. Do not smoke in the vicinity of the batteries. When working with cables and electrical equipment, avoid open lames and sparks;
- Attention: use protective glasses and gloves during battery maintenance. Battery acid causes injuries. In case of contact with battery acid, wash the affected parts with a lot of fresh water and consult a doctor if necessary.

INSTRUCTIONS MANUAL CHARGER

You must read this manual carefully and follow the instructions when charging the batteries or starting up vehicles.

MARS SERIES DESCRIPTION

The high-frequency battery chargers MARS-SERIES are designed for use in industrial environments. Particular attention was paid to meeting the needs different market applications require.
The battery chargers MARS-SERIES comply with the following European Directives:
89/336 EEC (electromagnetic compatibility)
72/23 EEC (safety of electrical equipment)

Installation

Use the battery charger inside an environment with the features that can warrant user safety and correct opeartions for the device. It has to be: dry, ventiled and not dusty .
According to its protection degree IP, the battery charger, cannot be used under rain or water sprays.
The battery charger must not be installed in unsafe areas for the presence of other activities, like:
- chemical industries and wood industries: risk of flammable material.
- ceramics industries, due to the great quantity of dust.
- food and meat transformation industries, due to the great quantity of water and humidity.

In these cases it is necessary to install the battery charger in protected areas.

Recommendations:

Do not close the input and the output for forced ventilation in order to allow a correct cooling of the unit.
For the same reason, do not store materials near the device and do not put liquid containers on the battery charger.

Operation, commands, and views.
The chargers MARS-SERIES come with a backlit LCD display and three touch-sensitive buttons (touch) that enable the data exchange between the device and the user.
At power on, the display lights up and gives information on the model and software release housed on the microprocessor inside the charger. Ex:

Firmware 1.0 (software release 1.0) on MARS 2415 model.

It then provides compared to the options chosen. Ex:

Voltage 15V, 12A current

Pb battery liquid, end of charge equalized.

Then you see the flashing battery symbol which means that the device is not connected to a battery.

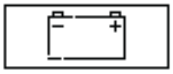

When you connect a battery, the battery charger automatically begins to charge according to the options. The state of charge is symbolized by a progressive scale and displayed numerically in%.

The charger can be stopped by tapping the start/stop button on the left for 3 seconds. Pressing it again for 3 seconds the charger starts again and so on. The middle button is used to view, in sequence, the battery voltage, amps provided instantly and the Ah loaded up to that point. The right button turns on the power supply.

FRONT BUTTON COMANDS

V key: The left button "V" sets the voltage between 12V and 24V. Press again to alternate between the two allowed values on the panel. When the charger is started (automatically) to load, becomes key Start / Stop. In this case, keeping the finger pressed for 3 seconds, the charger stops and allows you to disconnect the battery. After 5 seconds, if the battery is still attached, starts to load it.

MODE: The middle button "MODE" sets the mode of the device among those permitted and described in the instruction manual.
A button: The button on the right "A" sets the current model of the allowed values for the model. Pressures repeated successively bring the allowed values on the panel. When the charger has been programmed as a power supply (Power Supply) assumes the function of the Start / Stop button. In this case a pressure of 3 seconds ago from the power supply, the next press 3 seconds it stops and so away. In this operating mode, the output current depends on the load and arrival at the maximum of size (15A MARS 2415 50A MARS 2450, MARS 24100 100A).

CHARGING CURVES

The charging process is divided into 5 phases:
1 - Analysis. At battery connection, there is the analysis of the battery.
2 - Bulk. Phase of initial charge at constant current.
3 - Absorption. Charging, constant voltage which decreases the current drawn from the battery.
4 - Conditioning. Optional step of charging the batteries.
5 - **Floating**. Charging in the final buffer, an optional alternative to equalization.

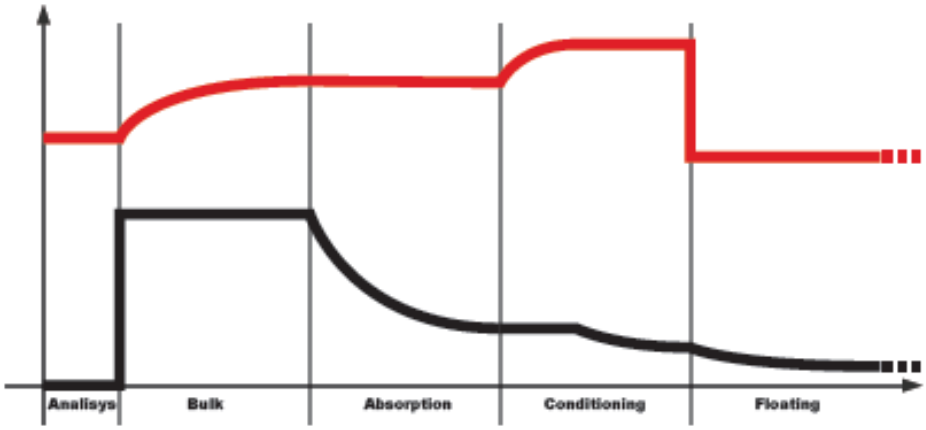

CONNECTION TO THE MAINS

For connection to the mains use the outgoing cable from the unit to the end of which will be sufficient to connect a suitable plug together with an earth terminal.
Avoid the use of extension cords.
The socket outlet to which you connect the battery charger must be proportionate to its power and shall have built-in fuses or other protections.
Check the rating plate data with respect to:
V - (Supply voltage), KVA - (power) and A - (current)
Ensure correct earthing.
The replacement of the power supply cable must be carried out by competent and authorized personnel.

CONNECTION TO THE BATERRY

For the connection to the battery, there are two cables coming out of one positive (+) marked in red.
Be careful not to reverse the cables connected to the battery terminals: to this end, we reccomend the use of special, one direction connectors, supplied by the manufacturer.

PROTECTION DEVICES

The MARS Series chargers are protected from :
- Reverse polarity, with a fuse on the DC circuit;
- Accidental breakage, with a fuse on the power circuit;
- Overload and short circuit on the output, via electronic protection;
- Charger overheating due to special environmental conditions, with thermal protection device that excreting pause the charger and restores only when the temperature of its components back to normal.

MAINTENENCE

Maintenance must be carried out only by specialized and authorized personnel.
Control inspection and verification depend on the environment and on the operating conditions.
Before beginning any inspections or maintenance, make sure that the battery and the power supply are disconnected.
We recommend that all internal electrical connections are periodically checked to make sure that the wires and the lugs do not show signs of overheating due to a poor contact. Remove all accumulated dust.

WIRING DIAGRAM

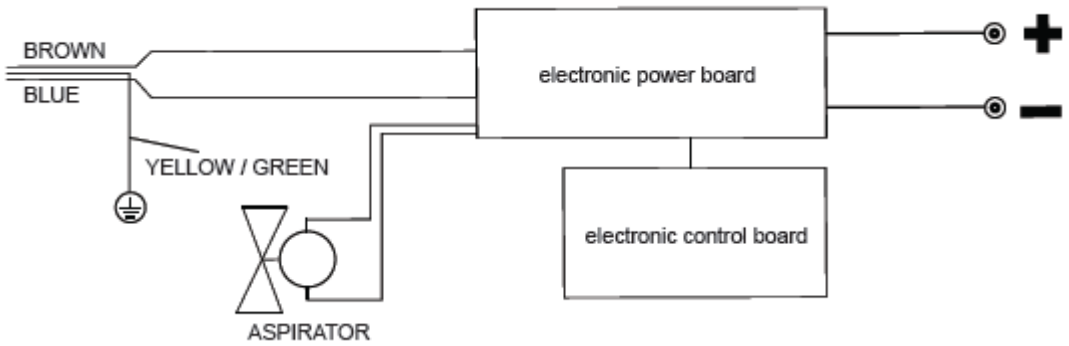

TRAXION BATTERY

www.exide.com

12ELEM.2EPZS100 24VAH5 (100Mah)
12/2 EPzS 120, 24 V, 120 Ah/5h (120Mah)
Dimensions: 580 x 215 x 390 L x W x H (Battery housing has to be an steel box)

AGM BATTERY

www.exide.com

AGM ZENITH BATTERY 2x 12V 106Ah
Dimensions: 307 x 169 x 237 L x W x H

Do you want to change the battery?
The connections of the traxion battery are the same those of the AGM battery.
When you remove the AGM batteries, also remove the bridge between them.
So, in the robot you have only 2 cables (+ and -) and the clamps are ok also for the traxion battery.
When change type of battery you have to change the charging curve.
FOR THIS OPERATION PLEASE CONTACT FROMM DISTRIBUTOR.

MAINTENANCE INSTRUCTIONS FOR OPERATORS

SAFETY!

- First switch off the main switch and lock it before carrying out maintenance on the installation.
- Take care, that other persons cannot put the installation in action.
- Take care, that the protection covers, etc. are remounted when putting the installation in action again.

The installation will have a long operational life due to preventive maintenance. This means, that the various parts of the installation have to be monitored on a weekly, monthly, semi-annually or annually schedule.

The operational lifetime is influenced by the environmental conditions. The indicated maintenance frequency is valid for normal operation conditions (8 hrs per day, 20° C, clean environment).
One is advised to increase the maintenance frequency under more severe conditions.
Keep rotating parts free from dirt.

REMAINDER OF THE FILM

The machine has to be cleaned every day
Never use solvents to clean the machine. To remove dust or particles deposited during the size changeover operations, never use compressed air: only use rags and aspirators.
Check if any film and packaging remainder are present in the brake system and remove it.

MAINTENANCE INSTRUCTIONS FOR OPERATORS

DAILY

Particular attention must be given to the charging of the Robot battery in order to ensure a long lifetime. The electronic control unit also incorporates the battery charger which operates under a tight control of the main electronic control unit.

The frequency with which the battery charger must be charged depends on the machine. The most important rules to preserve battery life are:

- Do not leave the batteries half charged or fully discharged for a long period.
- Charge the batteries when the operating panel indicates that the battery is discharged. Extended use when batteries are discharged can cause irreparable damage.

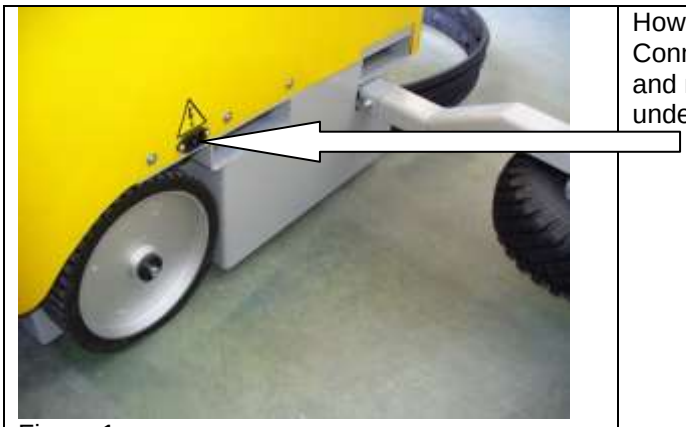 Figure 1	How to recharge: Connect the tension cable to the machine (Fig 1) and next to the electrical socket. Leave the Robot under charging.

 Figure 1	After connecting the plug the process of charging will start in a few seconds. If the charging will be interrupted, the charging will re-start from the initial point of charging, when the connection is re-stored. The green LED (Version03) or 100% (Version04) indicates that the charging has been finished with success.

For any other reporting refer to the technical manual of the charger.

WEEKLY

Cleaning. Using only isopropyl alcohol and a non-stringy cloth, thoroughly clean off any trace of dirt from all the working and transport surfaces of the machine, as dirt may cause surface friction and sliding problems. Where appropriate use only a cloth soaked in hot water.

MAINTENANCE INSTRUCTIONS FOR OPERATORS

HALF YEARLY

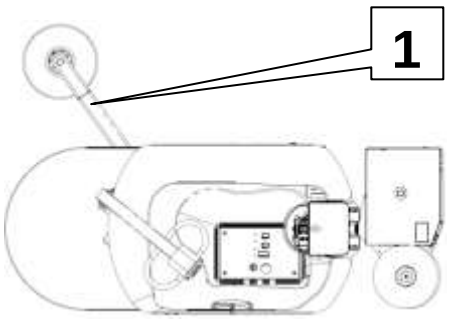

Fig. 1

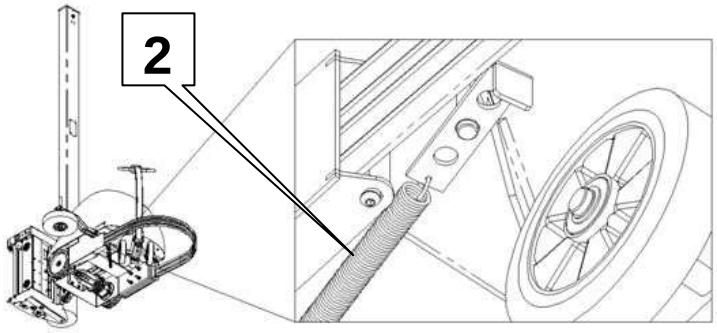

Fig. 2

Check that the feeder wheel arm (1) always returns in HOME position. If not replace the spring.

Check the status for wear and tear of drive and guide wheels and the rubber coated roller of the roll-holder carriage; if necessary replace them.

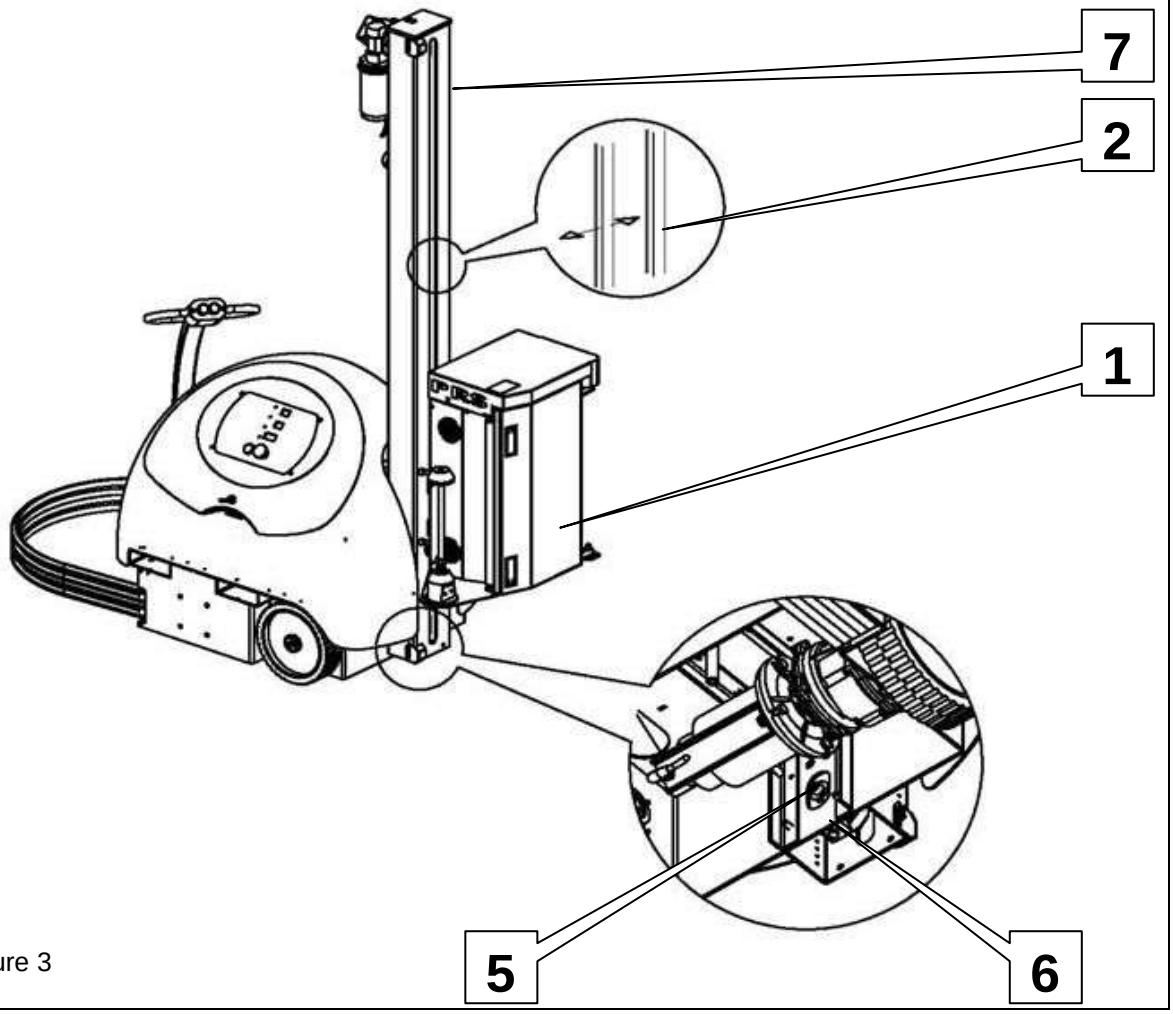

Figure 3

MAINTENANCE INSTRUCTIONS FOR OPERATORS

Turn off the machine and check the play of the roll-holder carriage. (Fig 3)
If the carriage (1) can be freely lifted with a few centimetres, the chain (2) must be tensioned in the following way.

- Loosen the screw (5), tighten the screw (6) until the oscillation of the slow branch, measured at the half height of the column, is contained in 2 cm. Tighten the screw (5).
- Lubricate the chain with grease.

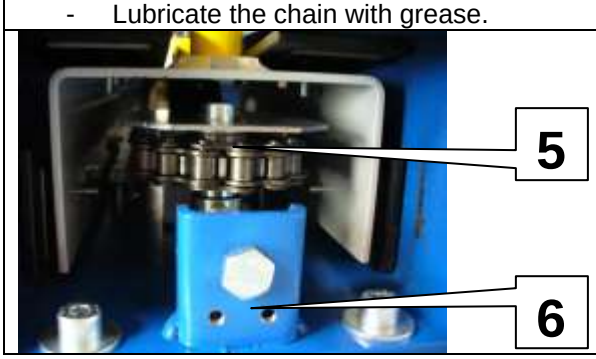

ALIGNMENT SPROCKET CARRIAGE 7:

After the replacement of the three sprockets you have to check that the pinions:
gearmotor, roller 2 and 3 are all aligned (picture 4):

- Close the door and lock it well with the screws (picture 1 and 2), check that there are no oscillations;
- Check that the rollers are parallel between themselves (picture 3) and with the frame;
- Check that the toothed faces of the sprockets are aligned between themselves;
- Check the backlash / the space between the tooth of the sprockets (usually a tenth of a mm)

After 15 days of work on the operation of the machine check that all the above points.

Fig 1

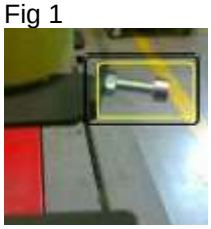

Fig 2

Fig 3

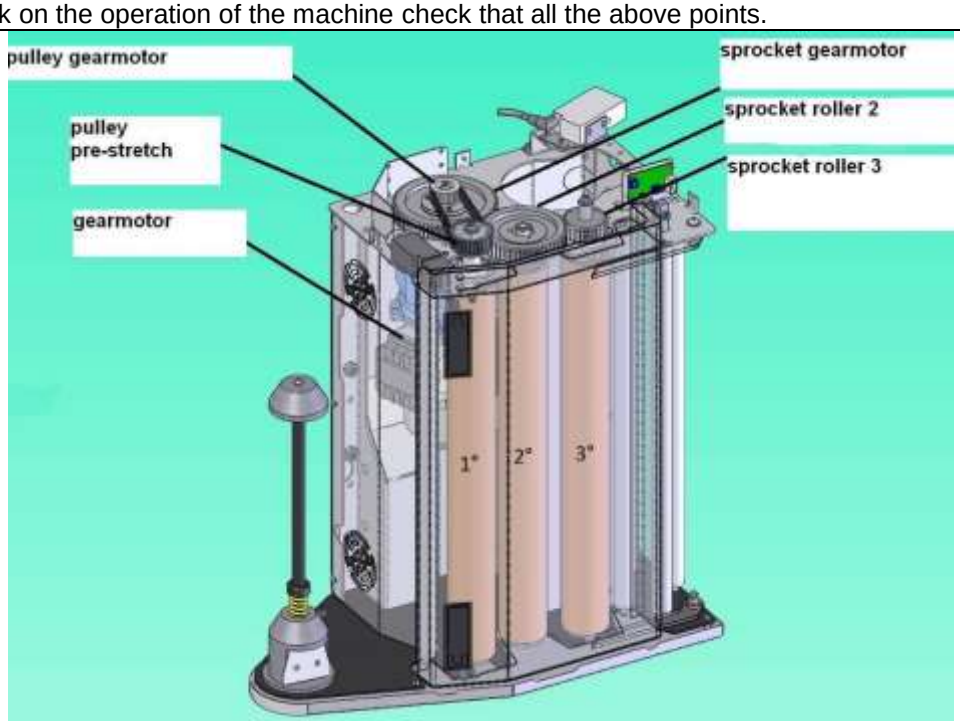

Fig 4

MAINTENANCE SCHEME

MAINTENANCE FREQUENCY							
	8 hr	40 hr	100 hr	200 hr	500 hr	1000 hr	2000 hr
Daily cleaning	X						
Cleaning eye of photocell			X				
Shaft chain				4			
Bearings						X	
Friction discs						X	
Proximity and limit switches						X	
Electrical system							X
Sliding wheels							X
Support wheels							X

The numbers in the maintenance scheme refer to lubricants, which are to be applied in the table with lubricants (hereunder).

The symbol "X" in the maintenance scheme refers to remarks concerning the maintenance of or checking on the relevant part or system.

LUBRIFICANTS

No.	LUBRIFICANT					
	SHELL	**BP**	**ESSO**	**MOBIL OIL**	**TEXACO**	
1	OMALA 220	ENERGOL GR-XP 220	SPARTAN EP 220	MOBILGEAR 630	MEROPA 220	
2	OMALA 680	ENERGOL GR-XP 680	SPARTAN EP 680	MOBILGEAR 636	MEROPA 680	
3	TONNA T68	MACCURAT 68	FEBIS K 68 EP220	VACTA.4	WAX LUBRI-CANT X68	
4	ALVANIA R	ENERGREASE L2	BEACON 2	MOBILUX 2	MULTIFAK EP2	
5	TELLUS 46	HPL 46	NUTCO H46	DTE 26	RANDO HD46	
6	TORCULA 32	ENERGOL RD-E 80	AROX EP 56	ALMOBIL 1	ARIES 32	
7	TELLUS 15				RANDO HDZ 15	
8	RETINAX WB				STARPLEX PREMIUM 1 (depending on the application)	

MANIFACTURER

FROMM Wrapping Systems S.r.l.
Viale del Lavoro, 21
37013 Caprino Veronese (VR)
Italia

Tel. +39 0452057300
Fax +39 0452057373

P.IVA 04146150232

www.fromm-stretch.com
info@fromm-stretch.com

DOCUMENTATION

For the spare parts, check the separately delivered spare-parts booklet.

Or download directly from our website:

http://www.fromm-stretch.com

Or contact your Fromm Distributor.

CE-Declaration of Conformity

(CE machine directive 2006/42/EC - Annex IIA)

Manufacturer	**FROMM Wrapping Systems S.r.l.** **Viale del Lavoro, 21** **37013 Caprino Veronese (VR)** **Italia**

Declare under our responsibility that the product

Model:	**FR3xx/FR4xx**
Item number:	**32.22X.XXX**
Serial number:	**04. XXXXX**
Production year	**2015**
Type of machinery	**Pallet Stretchwrapping machine**

Following the provisions of directive:

2006/42/EC	**(Directive)**
2004/108/EC	**(Electromagnetic compatibility)**
2006/95/EC	**(Low tension)**

Harmonized standards, national standards and other normative documents refer to Legislative Decree 17/2010 point 7.

Technical file at:	**FROMM Wrapping Systems S.r.l.** **Viale del Lavoro, 21** **37013 Caprino Veronese (VR)** **Italia**

Written in: Caprino Veronese (VR)
Date: 2015

Name: Sig. Fromm Reinhard
Function: Legale Rappresentante

WARRANTEE CONDITIONS

FROMM Distributor to End-user.

Warranty over a period of 12 months, using the machine in operation
8 hours a day, 40 hours a week. The warranty includes all deficiencies clearly resulting from poor manufacturing or faulty materials.

The warranty excludes:

a) wearing parts.
b) deficiencies resulting from improper stocking, incorrect handling and use as well as from using strapping / stretch film qualities not recommended by FROMM.
c) deficiencies resulting from improper repair work made by the customer.

Warranty lapses as soon as the installation is not maintained according to supplied maintenance- and operating instructions.
The warranty concerns the parts to be replaced, inclusive the necessary repair hours.

Damage claims as a result of production shutdowns and claims for damage to persons and to property resulting from warranty deficiencies cannot be asserted by the customer.

Maintenance costs

Ask your local distributor / supplier for the maintenance cost per year / service period.
Service will be provided according FROMM service conditions / contracts.

SERVICE LOGBOOK

Service / Maintenance executed	
Date:	
Engineer:	

Service / Maintenance executed	
Date:	
Engineer:	

Service / Maintenance executed	
Date:	
Engineer:	

Service / Maintenance executed	
Date:	
Engineer:	

Service / Maintenance executed	
Date:	
Engineer:	

Service / Maintenance executed	
Date:	
Engineer:	

SERVICE LOGBOOK

Service / Maintenance executed	
Date:	
Engineer:	

Service / Maintenance executed	
Date:	
Engineer:	

Service / Maintenance executed	
Date:	
Engineer:	

Service / Maintenance executed	
Date:	
Engineer:	

Service / Maintenance executed	
Date:	
Engineer:	

Service / Maintenance executed	
Date:	
Engineer:	